DEVELOPMENT OF THE NIST DETECTOR-BASED COLOR TEMPERATURE SCALE

George Eppeldauer and Yoshi Ohno

National Institute of Standards and Technology

100 Bureau Drive, Gaithersburg, Maryland 20899, USA

Phone: 301-975-2338, FAX: 301-869-5700, email: geppeldauer@nist.gov

ABSTRACT

Based on the spectral responsivity of the channels of a tristimulus colorimeter, a colour temperature scale is being developed at the National Institute of Standards and Technology (NIST). The low uncertainty of the spectral responsivity measurements can dominate the chromaticity measurement uncertainty. New tristimulus colorimeters are being developed where the channels can be calibrated with very low responsivity uncertainty. A 0.1 % change in the broad-band (spectrally integrated) responsivity in any channel of a tristimulus colorimeter will result in a change of 0.0002 in the *x, y* chromaticity coordinates for a Planckian radiator. In order to make spectral mismatch errors in tristimulus colour measurements negligible when real sources are measured, variable source distribution models are applied. The model adjusts the reference spectral source distribution (used to calculate the channel calibration factors) with iterative calculations until it becomes nearly equal to the test source distribution.

Keywords: chromaticity, CIE colour matching functions, colour temperature, colour calibration, tristimulus colorimetry.

1. INTRODUCTION

Improvements in detector technology over the past decade have opened a new era in radiometric, photometric, and colorimetric calibrations. Lower measurement uncertainties can be achieved with modern detector standards than with traditionally used source (lamp) standards.

2. THE DETECTOR-BASED METHOD

The channel calibration factors (k_{X1} to k_Z) of a tristimulus colorimeter are the ratios of the Commission Internationale de l'Eclairage (CIE) tristimulus values to the measured channel output currents (I_{X1} to I_Z) [1]:

$$k_{X1} = \frac{X_1}{I_{X1}} = \frac{K_m \int_\lambda E(\lambda)\bar{x}_1(\lambda)d\lambda}{\int_\lambda E(\lambda)s_{X1}(\lambda)d\lambda}$$

$$k_{X2} = \frac{X_2}{I_{X2}} = \frac{K_m \int_\lambda E(\lambda)\bar{x}_2(\lambda)d\lambda}{\int_\lambda E(\lambda)s_{X2}(\lambda)d\lambda}$$

$$k_Y = \frac{Y}{I_Y} = \frac{K_m \int_\lambda E(\lambda)V(\lambda)d\lambda}{\int_\lambda E(\lambda)s_Y(\lambda)d\lambda}$$

$$k_Z = \frac{Z}{I_Z} = \frac{K_m \int_\lambda E(\lambda)\bar{z}(\lambda)d\lambda}{\int_\lambda E(\lambda)s_Z(\lambda)d\lambda} \qquad (1)$$

where $E(\lambda)$ is the relative spectral distribution of the reference source, $\bar{x}_1(\lambda)$, $\bar{x}_2(\lambda)$, $V(\lambda)$, and $\bar{z}(\lambda)$ are the CIE color matching functions, K_m is the maximum spectral luminous efficacy, 683 lm/W, $s_{X1}(\lambda)$, $s_{X2}(\lambda)$, $s_Y(\lambda)$, and $s_Z(\lambda)$ are the measured spectral responsivities of the realized channels, and λ is the wavelength. The channel calibration factors include the amplitude normalizations and spectral mismatch corrections for the imperfect channel realizations for a given $E(\lambda)$. The integrals are to be made between 360 nm and 1000 nm (for the responsivity range of the silicon detector in the colorimeter). Using the four calibration factors, the tristimulus values of test light sources are determined:

$X' = X_1' + X_2'$, where $X_1' = k_{X1} I_{XI}'$ and

$X_2' = k_{X2} I_{X2}'$, $Y' = k_Y I_Y'$, and $Z' = k_Z I_Z'$ (2)

where I_{XI}', I_{X2}', I_Y', and I_Z' are the channel output signals for a given test source.

The calibration procedure can be applied to various measurement geometries (e.g., illuminance, luminance, etc) depending on

the units in which the spectral responsivities are expressed. The lowest responsivity uncertainty can be achieved if the channels are calibrated against a reference silicon trap-detector that can be operated in irradiance measurement mode.

3. DESIGN OF THE COLORIMETERS

A reference tristimulus colorimeter has to be designed such that the spectral responsivities of the channels can be determined in a given measurement mode (such as illuminance) with a low uncertainty. The uncertainty of the channel responsivity calibrations should be dominating over the colorimeter design produced measurement uncertainties. When this requirement is achieved, the responsivity calibration uncertainty of the colorimeter channels can dominate the colour measurement uncertainty if the test source distribution is similar to $E(\lambda)$ in Eqs (1). The spectral mismatch of the channels to the CIE colour matching functions also should be small to keep the colour measurement uncertainty low even if test sources with different distribution from $E(\lambda)$ are measured.

The Si detector of the tristimulus colorimeter can be either a trap detector or a single-element photodiode. The computer made cut-out-view of the Si tunnel trap detector, used in the first generation reference tristimulus colorimeter [2], is shown in Fig. 1.

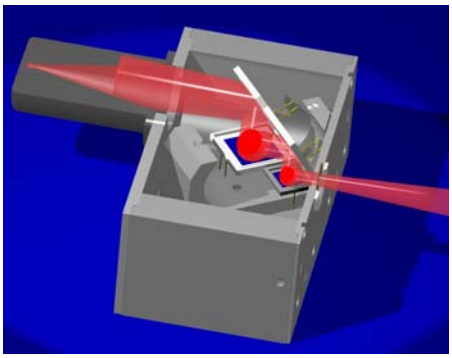

Fig. 1. Cut-out-view of the tunnel-trap detector used in the tristimulus colorimeter

The graph illustrates the design of the beam propagation inside of the trap detector when the aperture, that defines the reference plane for illuminance mode measurements, is overfilled by the incident light focused to the aperture. The filter rotating mechanism is not shown in this illustration. Figure 2 shows the temperature controlled filter wheel that can be moved between the aperture and the trap detector. The temperature control keeps the spectral mismatch at the designed low level and produces a good long-term stability for the filter transmittances. The filter combinations were individually fabricated to obtain relative spectral responsivities for the channels with the smallest possible spectral mismatch to the CIE functions [2]. The photodiodes are not temperature controlled because their temperature coefficient of responsivity is close to zero up to 950 nm. In irradiance measurement mode, as shown in Fig. 3, the angular responsivity of the trap-detector used in the tristimulus colorimeter follows the cosine function within an acceptance angle of 8°. This requirement is needed for extended sources or when a small source is measured which is located outside of the optical axis of the colorimeter.

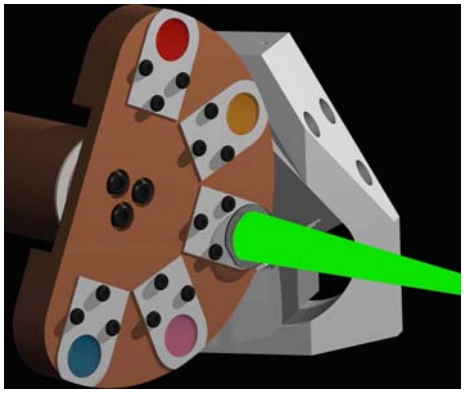

Fig. 2. Computer design of the tunnel trap detector - filter wheel - aperture assembly.

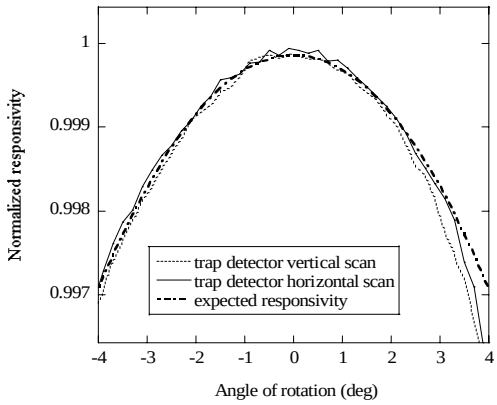

Fig. 3. Angular responsivity of the tristimulus trap detector based colorimeter.

Modified reference tristimulus colorimeters are being developed using single-element silicon photodiodes. The photodiodes are sealed with wedged windows to avoid interference fringes during responsivity calibration at the laser-based SIRCUS facility. The sealing also gives improved long-term stability for the detector and thus for the colorimeter. New filter combination sets have been fabricated to obtain equal relative spectral transmittances for the same type of channels with the smallest possible spectral mismatch to the CIE functions. The exploded view of the new design is shown in Fig. 4. The filter wheel together with the heat sink, including the thermoelectric (TE) cooler and thermistor, are rotated from the back side of the light tight box with a knob. The current-to-voltage converter (I to V amplifier) is mounted on the side of the light tight box. The computer design is shown in Fig. 5.

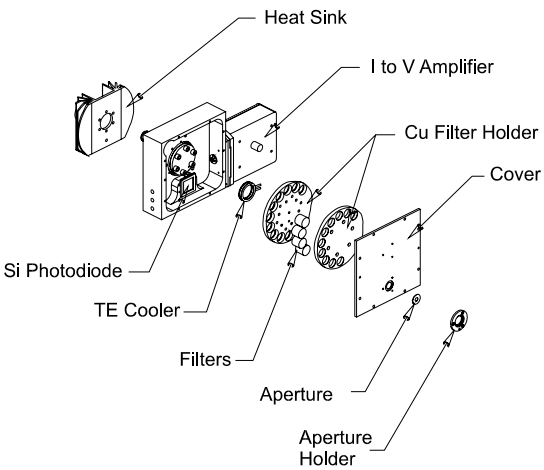

Fig. 4. Exploded view of the new colorimeter

The uncertainty of the current-to-voltage conversion in the photodiode current meter has to be also small not to dominate the responsivity uncertainty. In order to achieve this goal, the loop-gain of the current-to-voltage converter must be high enough [3]. Also, feedback resistors with 0.01 % tolerance to their decade nominal values are used in the current-to-voltage converters for signal-gain selections between 10^4 Ω and 10^8 Ω. These resistors can be purchased with temperature coefficients of around 0.001 %/^{o}C. The achievable dynamic range of signal measurements is twelve decades.

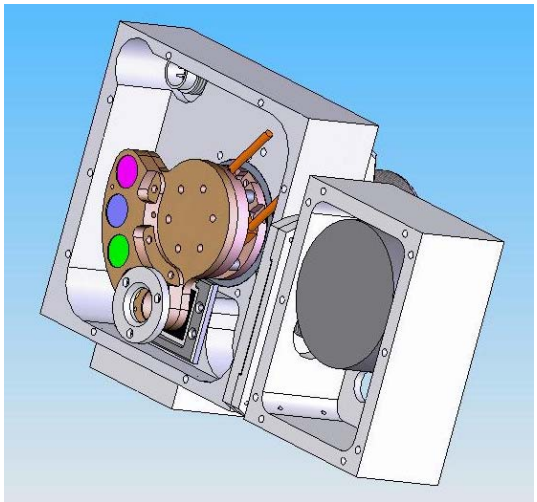

Fig. 5. Computer design of the new colorimeter (without the front panel)

4. CALIBRATION CONSIDERATIONS

Realization of the channel responsivities of a tristimulus colorimeter with a small spectral mismatch to the CIE colour matching functions and the low uncertainty spectral responsivity measurements of the channels make it possible to realize a colour scale with low uncertainty, especially for tungsten lamps. The four channels of the trap detector-used reference colorimeter were calibrated on the NIST facility for spectral irradiance and radiance responsivity calibrations with uniform sources (SIRCUS) with a relative expanded uncertainty of 0.15 % (k=2). The measured irradiance responsivity curves are shown in Fig. 6. Thereafter, the broad-band calibration factors were calculated with Eqs. (1) using the SIRCUS measured responsivities and a 2856 K reference source distribution: $k_Y = 2.036$ lx/V, $k_{X1} = 8.359$, $k_{X2} = 8.769$, and $k_Z = 108.96$. The tristimulus values of the test source were determined from Eqs. (2) using these calibration factors. Numerical modelling showed that a 0.1 % change in any of the tristimulus values will result in a 0.0002 change in x and y for a Planckian radiator. These changes correspond to an expanded (but not relative) uncertainty of 4 K in colour temperature, a factor of two less than the uncertainties of current primary colour temperature lamp standards.

In irradiance mode, the aperture size uncertainty and the uncertainty due to non-

uniform spatial response of the channels are eliminated. The Y channel was measured twice with 15 months separation and the integrated (illuminance) responsivity change was within 0.1 %. The uncertainty of the SIRCUS measurements applies to single responsivity points at the laser wavelengths where the measurements were taken. In the spectrally integrated responsivity of the four channels, the responsivity values at neighbouring wavelengths are affected in the same way. Therefore, in addition to the independent (uncorrelated) components, systematic (correlated) components across wavelength are present. When accurate colour measurements are needed, it is usually the systematic components that determine the measurement uncertainty.

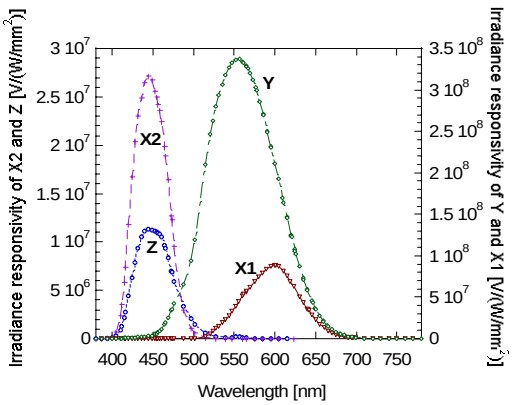

Fig. 6. Spectral irradiance responsivities of the trap detector colorimeter channels

Research is being done to describe the propagation of the uncertainty components in the most correct way. The goal is to keep the responsivity measurement uncertainty at the lowest level because the combined relative uncertainty of the spectrally integrated responsivity of the channels (the reciprocal of the channel calibration factors) will determine the minimum of the achievable uncertainty of *x* and *y*. Recently, the relative expanded uncertainty of the SIRCUS spectral irradiance responsivity calibrations decreased to 0.06 % (k=2), equal to the uncertainty obtained using the internal quantum efficiency (output electrons per input photons) model for Si trap detector responsivity interpolation between 406 nm and 920 nm. Using this model, only a few trap-detector responsivity points are needed. The spectral transmittance of each colour-correcting filter combination can be multiplied with the interpolated spectral responsivity of the common trap-detector. (The interpolation can produce correlated uncertainties in the responsivities.)

The new group of the modified tristimulus colorimeters can be calibrated in broad-band mode against a reference tristimulus colorimeter using a transfer source with a distribution equal to $E(\lambda)$ in Eqs (1). A tungsten halogen lamp with a distribution close to the CIE Illuminant A is a possible choice. $E(\lambda)$ can be a different distribution but it should be similar to the transfer or test source distribution if very small spectral mismatch errors are needed. The calibration uncertainties will decrease if one of the new colorimeters (calibrated on SIRCUS) is used as reference colorimeter. The reciprocal of the transferred broad-band responsivities will be the channel calibration factors.

5. TUNGSTEN LAMP MEASUREMENTS

In order to evaluate how different the test source distributions from the reference source distribution $E(\lambda)$ in Eqs (1) can be, chromaticity errors were calculated for test Planckian sources with temperatures varying from 2000 K to 3200 K. The above calculated (one set of) calibration factors were used. The output signals from the individual colorimeter channels were calculated from the integrals in the denominators of Eqs. (1). The tristimulus values and the chromaticity coordinates for the different blackbody temperatures were calculated according to Eqs. (2). Thereafter, chromaticity coordinate differences between the true (calculated from the 2856 K source distribution using the CIE colour matching

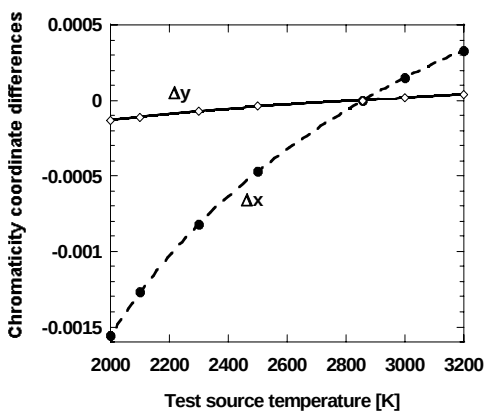

Fig. 7. Chromaticity errors of the trap detector colorimeter for different temperature Planckian test sources

functions) and the calculated values for the different temperature test blackbodies were determined. The results in Fig. 7 show that the errors in the chromaticity coordinates using the reference trap-detector colorimeter are less than 0.001 if the temperature change is less than about 650 K (at 2200 K). These errors dominate over the responsivity produced chromaticity uncertainty discussed above. The results show, that the detector-based calibration method, when applied to a tristimulus colorimeter with spectrally well-matched channels to the CIE functions, is not very sensitive to source distribution changes.

6. NON-PLANCKIAN SOURCE MEASUREMENTS

When sources other than Illuminant A are measured, spectral mismatch errors can introduce chromaticity errors even with spectrally well realized channel responsivities. In this case, the uncertainty of colour measurement increases. As an example, the chromaticity errors of the trap-detector-used-tristimulus-colorimeter were calculated for different test white-source distributions, such as the Liquid Crystal Display LCD-white, Cathode Ray Tube CRT-white, high pressure metal halide, cool-white-, tri-phosphor- and day-light-fluorescent lamp. The calculated Δx and Δy errors are shown in Fig. 8 when the CIE Illuminant A was used as $E(\lambda)$ in Eqs. (1).

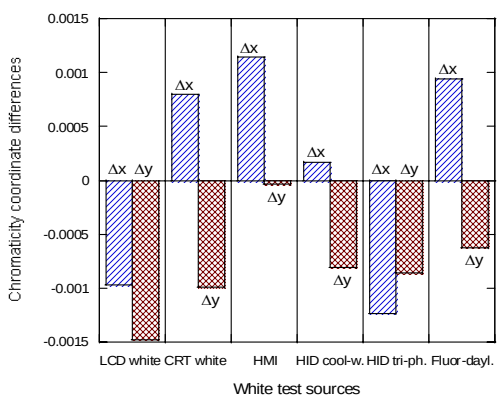

Fig. 8. Chromaticity coordinate errors of the trap-colorimeter for different white-sources

When the same calculations were repeated for non-white test sources, such as LCD- and CRT-blue, -red and -green, the chromaticity errors increased (especially for blue colours) as shown in Fig. 9.

Even if the detector-based channel calibration factors are highly insensitive to source distribution changes, an approximate spectral distribution of special test sources (with structured or narrow band spectral distribution) is needed for the calculation of

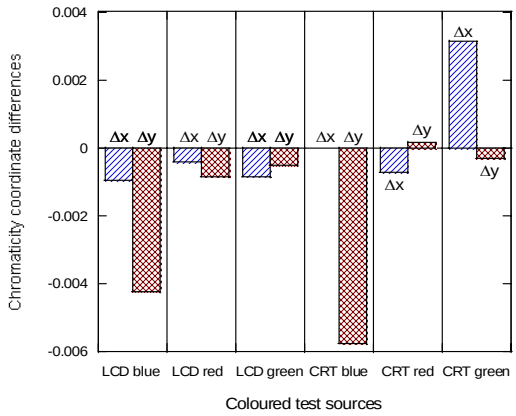

Fig. 9. Chromaticity coordinate errors of the trap-colorimeter for different colour-sources

the calibration factors to avoid large spectral mismatch and to obtain chromaticity errors smaller than in Fig. 9. In this case, an inexpensive and fast spectrograph with large measurement uncertainty (such as an array spectrometer) can be used to obtain a rough spectral distribution of the special test source to be measured. Thereafter, the tristimulus colorimeter calibrated on detector-base (using the special test source distribution measured by the spectrometer) can measure the x and y chromaticity coordinates with errors of less than 0.001. The simple and fast detector-based method is competitive with traditional scanning spectroradiometer based methods. In the complicated and slow scanning spectroradiometer methods, lamp standards are used for calibration. To avoid using any kind of spectrometers, variable reference source (spectral distribution) models have been worked out to further simplify the detector-based calibration method.

7. SPECTRAL DISTRIBUTION MODELS

An advantage of the detector-based calibration method is that the calibration

factors of a tristimulus colorimeter can be determined for any (reference) spectral source distribution including theoretical models. The chromaticity errors calculated above for different test sources can be significantly reduced if an approximate spectral distribution of the test source is used as $E(\lambda)$ in Eqs. (1). The variable reference source model, applied to certain source types, eliminates or reduces the spectral mismatch errors without knowing the spectral distribution of the test source. These models can adjust the reference spectral source distribution (used to calculate the channel calibration factors) with iterative calculations until it becomes nearly equal to the test source distribution. The adjustment is based either on the colour temperature or the tristimulus values of the test source being measured by the colorimeter.

7.1. Variable Planckian source model

A model using Planckian radiation with a variable temperature T [K] has been tested [4]. $E(\lambda)$ in Eqs. (1) is given by

$$E(\lambda) = k\lambda^{-5}\left[\exp(c_2 / \lambda T) - 1\right]^{-1} \qquad (3)$$

where c_2 = 1.4388x10^{-2} m·K, and k is the normalization constant.

The calibration factors in Eqs. (1) are initially calculated for T=2856 K (CIE Illuminant A). Then a test lamp is measured with the colorimeter and the colour temperature T_1 is obtained. Next, T_1 is replaced in Eqs. (1) and the calibration factors are recalculated. With the recalculated calibration factors, the colour quantities of the test source are recalculated as well. After this recalculation, the correlated colour temperature (CCT) and thus the spectral distribution of the reference source in Eqs. (1) are nearly equal to those of the test source, realizing a strict substitution. A one-time recalculation can remove most of the errors for incandescent lamps, but two or three iterations can decrease the mismatch errors negligibly small. The small remaining errors are due to the small deviation of the spectral distribution of the test source from the theoretical Planckian curve. The residual errors for a quartz halogen lamp at colour temperatures of 2300 K to 3200 K were found to be less than 0.00002 in x and y for the trap-detector used colorimeter.

Another source distribution model based on primary display colours decreased the chromaticity errors of coloured liquid crystal display (LCD) measurements to < 0.001 [4].

CONCLUSIONS

The channels of the NIST developed reference tristimulus colorimeter can be calibrated with sub 0.1 % (k=2) responsivity uncertainty. Broad-band channel calibration factors were calculated from the measured spectral irradiance responsivity data and the tristimulus values of different test light sources were measured and calculated. The 0.15 % (k=2) relative expanded uncertainty of the spectral irradiance responsivity calibrations resulted in a chromaticity coordinate expanded uncertainty of 0.0004 for both x and y for a Planckian radiator. These uncertainties correspond to an expanded uncertainty of 4 K of CCT measurements, a factor of two less than the uncertainties obtained with primary colour temperature lamp standards. The variable Planckian source model eliminated the spectral mismatch caused chromaticity errors (that were added to the responsivity-uncertainty-caused chromaticity errors) in CCT measurements of tungsten lamps.

ACKNOWLEDGEMENT

The authors thank the US Air Force AFMETCAL for funding this project.

REFERENCES

1. Eppeldauer, G.P., *Spectral response based calibration method of tristimulus colorimeters.* J. Res. NIST, 1998. **103**(6): p. 615.
2. Eppeldauer, G.P. and Racz, M., *Design and characterization of a photometer-colorimeter standard.* Applied Optics, 2004. **43**(13).
3. Eppeldauer, G.P., *Optical radiation measurement with selected detectors and matched electronic circuits between 200 nm and 20 μm.* NIST Technical Note, 2001. **1438**(U.S. Gov. Printing Office).
4. Eppeldauer, G.P., et al., *Realization and application of a detector-based tristimulus color scale at the NIST, USA.* Proceedings Book AIC Colour 05, 2005. **Part I**: p. 693-696.