NIST Technical Note 1421

A National Measurement System for Radiometry, Photometry, and Pyrometry Based Upon Absolute Detectors

A. C. Parr

Optical Technology Division
Physics Laboratory
National Institute of Standards and Technology
Gaithersburg, MD 20899-0001

September 1996

U.S. Department of Commerce
Michael Kantor, Secretary

Technology Administration
Mary L. Good, Under Secretary for Technology

National Institute of Standards and Technology
Arati Prabhakar, Director

National Institute of Standards
and Technology
Technical Note 1421
Natl. Inst. Stand. Technol.
Tech. Note 1421
35 pages (Sep. 1996)
CODEN: NTNOEF

U.S. Government Printing Office
Washington: 1996

For sale by the Superintendent of
Documents
U.S. Government Printing Office
Washington, DC 20402

Table of Contents

		Page
I.	Introduction	2
II.	Electrical Substitution Radiometry	3
III.	Detector Spectral Comparators	8
IV.	Filter Detector Systems and Use	12
	a. Photometry and Colorimetry	12
	b. Spectral Radiometry	19
	c. Pyrometry	25
V.	Conclusion and Suggestions	25
Reference		27

A National Measurement System for Radiometry, Photometry, and Pyrometry Based upon Absolute Detectors.

Albert C. Parr
Optical Technology Division
Physics Laboratory
National Institute of Standards and Technology
Gaithersburg, MD USA 20899-0001

Advancements in the performance and ease of use of absolute photodetectors based upon electrical substitution principals offers the possibility of a simplified and more accurate way to transfer the fundamental radiometric, photometric, and pyrometric units from NIST to the U.S. technical establishment. The history of electrical substitution radiometers at NIST is briefly reviewed and the implementation of the latest generation absolute cryogenic radiometer is discussed. Procedures to maintain fundamental units based upon a detector approach are reviewed in a general way with references to the technical literature for detailed discussion. It is proposed that NIST customers consider adopting the suggestions made in this technical note to simplify and improve their optical radiation based calibrations.

Keywords: cryogenic radiometers, photometry, pyrometry, radiometry

I. Introduction

The National Institute of Standards and Technology's (NIST) measurement procedures employed to characterize the spectral characteristics of light sources have been based upon the well established physics of blackbody sources [1]. The photometric units were traditionally established using optical source based methods and utilizing the accepted International Commission on Illumination (CIE) defined response for ordinary human vision, the spectral luminous efficiency, $V(\lambda)$ [2]. This Technical Note will outline the new NIST methods of maintaining radiometric, photometric, and pyrometric units based upon the use of absolute detector systems and will advocate a shifting of methodology for these measurements that takes advantage of the new opportunities afforded by detector based measurements.

The radiometric and photometric units and quantities usually referenced in technical discussions are shown in Table 1. The left side of the table identifies the radiometric quantity, the usual symbol utilized to describe it, and the corresponding units in the International System of units (SI) [3]. The right side describes the photometric units, their symbols and the SI units associated with them. In the table, the SI unit of the candela (cd) is replaced with the unit of the lumen (lm) using the defined relationship, cd = lm/sr. Representing the quantities in terms of the lumen, the photometric equivalent of the watt, instead of the candela lends symmetry to the table and a convenience for understanding the often confusing radiometric and photometric terms.

Table 1. This table gives the radiometric and photometric quantities, their usual symbols and their metric definitions

Radiometric Quantity	symbol	units	units	symbol	Photometric Quantity
Radiant Energy	Q	J	lm s	Q_v	Luminous energy
Radiant Flux (power)	P, Φ	W	lm	Φ_v	Luminous Flux
Irradiance	E	W/m^2	lm/m^2	E_v	Illuminance
Radiance	L	$W/(m^2\ sr)$	$lm/(m^2\ sr)$	L_v	Luminance
Radiant Intensity	I	W/sr	lm/sr	I_v	Luminous Intensity

J=joule, W=watt, lm=lumen, m=meter
sr=steradian, s=second

The NIST maintenance of irradiance, radiance, and the photometric units has been discussed in a series of special publications available from NIST or the U.S. Government Printing Office [4,5,6]. In order to assess the importance of the NIST photometric and radiometric work in the technical community, Kostkowski reviewed the industrial and commercial impact of these activities and the

Council for Optical Radiation Measurement (CORM) has produced detailed reports outlining industrial and technical requirements for the U.S. scientific community [7,8].

The NIST unit of radiation temperature is based upon the radiation output of blackbody sources and is described in detail in a NIST special publication [9]. In 1990 the Comité International des Poids et Mesures (CIPM) decided that temperature measurement for temperatures above the freezing point of silver, $T = 1234.93$ K, were to be maintained using optical techniques [10]. This change results in the temperature unit for temperatures above the silver freezing point to depend upon similar optical measurement technology that is used to define the radiometric and photometric units. As a consequence the NIST radiation temperature unit for a well characterized blackbody source can be referenced to absolute detectors.

In 1979 the Conférence Générale des Poids et Mesures (CGPM) adopted the 1977 CIPM recommendation for the redefinition of the candela. The new definition for the candela is a source of monochromatic radiation at a frequency of 540×10^{12} Hz (about 555 nm) and with an intensity of 1/683 W/sr. This optical power based definition, and the recognition of the CIE $V(\lambda)$ function, provided the opportunity to base photometric units on detector measurements [11]. Many national laboratories have implemented this approach for developing their photometric units and after a substantial development program NIST recently completed its efforts to place the calibrations for the candela and the lumen directly upon an absolute detector [12,13]. An impetus for the change to a detector approach for radiometry and photometry is the advent of the availability of high accuracy cryogenic electrical substitution radiometers. These devices can have a relative combined standard uncertainty of less than 0.01 % for optical power measurements and can be conveniently utilized in a well equipped modern radiometric laboratory*. A brief review of these devices will be given in a following section of this Technical Note.

Users of optical radiation measurement devices require improved accuracy to meet competitive demands in the marketplace and to improve the quality and efficiency of production facilities. Optical sensor systems for space based Earth observation have an increasing demand for more accurate measurements. This places a burden on the national metrology system to provide calibration support with reduced uncertainties. This Technical Note will review NIST's efforts to improve the accuracy and stability of its radiometric, photometric, and pyrometric units to accommodate these expressed needs of its customers. General aspects of radiometry and photometry will not be reviewed as this task is effectively and broadly covered by the technical literature and recent books [14].

II. Electrical Substitution Radiometry

Electrical Substitution Radiometers (ESRs) are devices that measure optical radiation by comparison to an equivalent amount of electrical power. ESRs are sometimes referred to as Electrically Calibrated Radiometers (ECRs) or simply as absolute radiometers. The fundamentals of an ESR can be understood by reference to Fig. 1. The radiant flux (optical power) Φ_p is incident upon a receiving cavity designed to optimize the collection of radiation. Upon absorption of the radiation, the cavity will experience a temperature rise. The receiver is coupled to a constant temperature heat sink at a reference temperature T_0 with a thermal conductor of conductance G. Ignoring losses due to radiation, convection and stray thermal conductance, the equilibrium (long time) temperature rise is given by $T - T_0 = \Phi_p / G$. When the shutter is imposed to intercept the light beam, electrical power to the cavity is increased a sufficient amount to maintain the cavity temperature determined by the temperature sensor system at the shutter open level. Ignoring

corrections and losses mentioned earlier, the optical power is given by $\Phi_p = i_h^2 R$ where i_h is the increased current applied through the heater of resistance R required to maintain temperature stability. The practical challenge when utilizing ESRs is to carefully characterize the potential loss mechanisms in order to apply appropriate corrections to the power equivalence relationship.

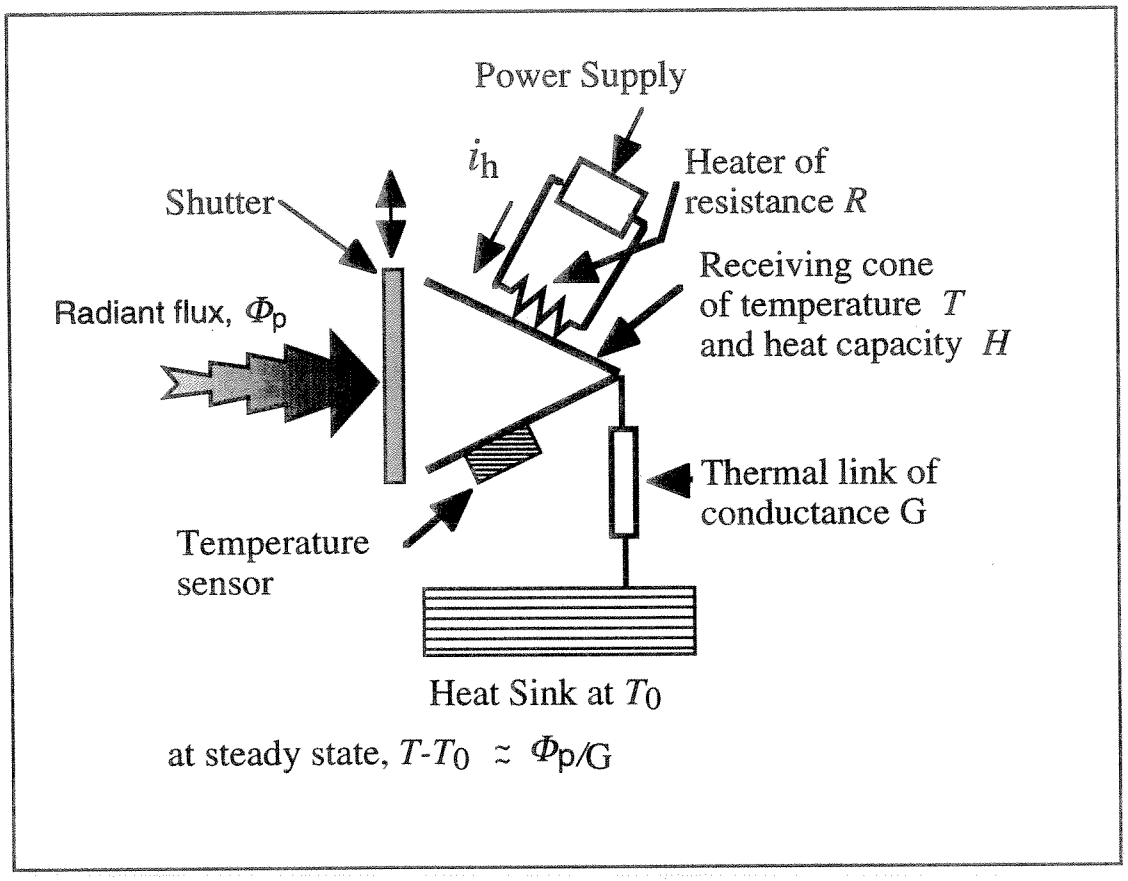

Figure 1. Schematic diagram of the essential components of an electrical substitution radiometer. The total light flux Φ_p measured in watts is collected by a receiving cavity usually shaped in the form of a cone. The temperature of the cavity, T, and the temperature of the heat sink, T_0, are monitored by temperature sensor systems. When the shutter is closed, electrical power equivalent to the optical power is applied by the power supply system thereby establishing the optical power.

ESRs have been in use for 75 years or more and have had their history and development described by Hengstberger in considerable detail [15]. Work on ESR technology was pioneered by Coblentz at NIST, at that time the National Bureau of Standards (NBS), during the early part of this century [16]. He developed a number of radiometers and used them for diverse purposes in photometry and radiometry, including an early measurement of the Stefan-Boltzmann constant [17]. For a variety of technical reasons and the fact that the SI photometric unit, the candela, was defined until 1979 in terms of the output of candles and eventually a fixed point platinum blackbody, radiometry

and photometry depended upon characterization of sources for the maintenance of units. The 1979 candela redefinition in terms of optical power helped spur the shifting of radiometric and photometric measurements to detector based technology.

The incorporation of detectors into photometric and radiometric standards was assisted by several developments in the 1970's and 1980's. High quality silicon photodiodes became available and provided a convenient device with which to make optical measurements in the visible wavelength region [18]. Electrical substitution devices were designed and constructed to operate at cryogenic temperatures in order to increase the sensitivity of the devices and to reduce the uncertainties due to radiation and conduction losses. The first cryogenic radiometer at NIST was constructed by Ginnings and Reilly in 1972 to measure thermodynamic temperatures above 0 ^{0}C [19]. For a variety of reasons this project did not achieve the desired results, but by building on the experience gained by Ginnings and Reilly, in the mid-1970's Yokley built a cryogenic radiometer system at NIST to measure the radiation temperature of low temperature blackbodies used in a low background environment [20]. This device was used for a number of years to perform specialized calibrations of low flux sources but was not engineered to perform high accuracy measurements and as a consequence produced results with relative uncertainties of several percent.

Quinn and Martin at the National Physical Laboratory (NPL) in the UK developed a high accuracy cryogenic radiometer for use in a radiometric determination of the Stefan-Boltzmann constant [21]. The system that the NPL team developed allowed for the determination of the Stefan-Boltzmann constant with a relative combined standard uncertainty of 0.013 %. This important benchmark work contains a detailed analysis of the errors and uncertainties associated with a cryogenic ESR and has led to the adoption of these devices as fundamental radiometric standards with relative combined standard uncertainties of less than 0.01 %. NPL staff later developed this device into a radiometer for laser power sources and thereby provided a comparative technique to establish high accuracy radiometric units with other stable detectors [22]. The technology has evolved and at least two companies are offering commercial versions of absolute cryogenic radiometers [23]. The availability and accuracy of the instruments has resulted in their employment by a number of national standards laboratories to provide the basis of radiometric measurement [24].

The NIST high accuracy cryogenic radiometer (HACR) is shown in Fig. 2 and is described in detail in the technical literature [25]. The heart of the instrument is the absorbing cavity which is connected to a thermally controlled heat sink held at 5 K. The apparatus is evacuated with a vacuum pumping system and has cryogenic fluid reservoirs to provide the low temperature environment for the cavity absorption and electrical heating system operation. Polarized optical radiation from a laser system enters the vacuum vessel of the HACR through a window at Brewster's angle.

A typical mode of operation for the HACR is shown schematically in Fig. 3 and is described in the literature [25,26]. A secondary or transfer standard detector (TSD) is inserted into the laser beam and intercepts the same beam as measured by the HACR. A TSD is a detector which is calibrated directly with the HACR and can then be used to transfer the detector response unit to other calibrations systems. After appropriate corrections for HACR entrance window transmittance and other systematic effects the absolute response of the TSD is deduced. In Fig. 3 the TSD is depicted as a trap detector, so called because of the arrangement of several silicon photodetectors in a configuration designed to absorb a large portion of the incident light. These silicon devices work well in the 400 nm to 1000 nm wavelength region and different types of TSDs are used in other wavelength regions.

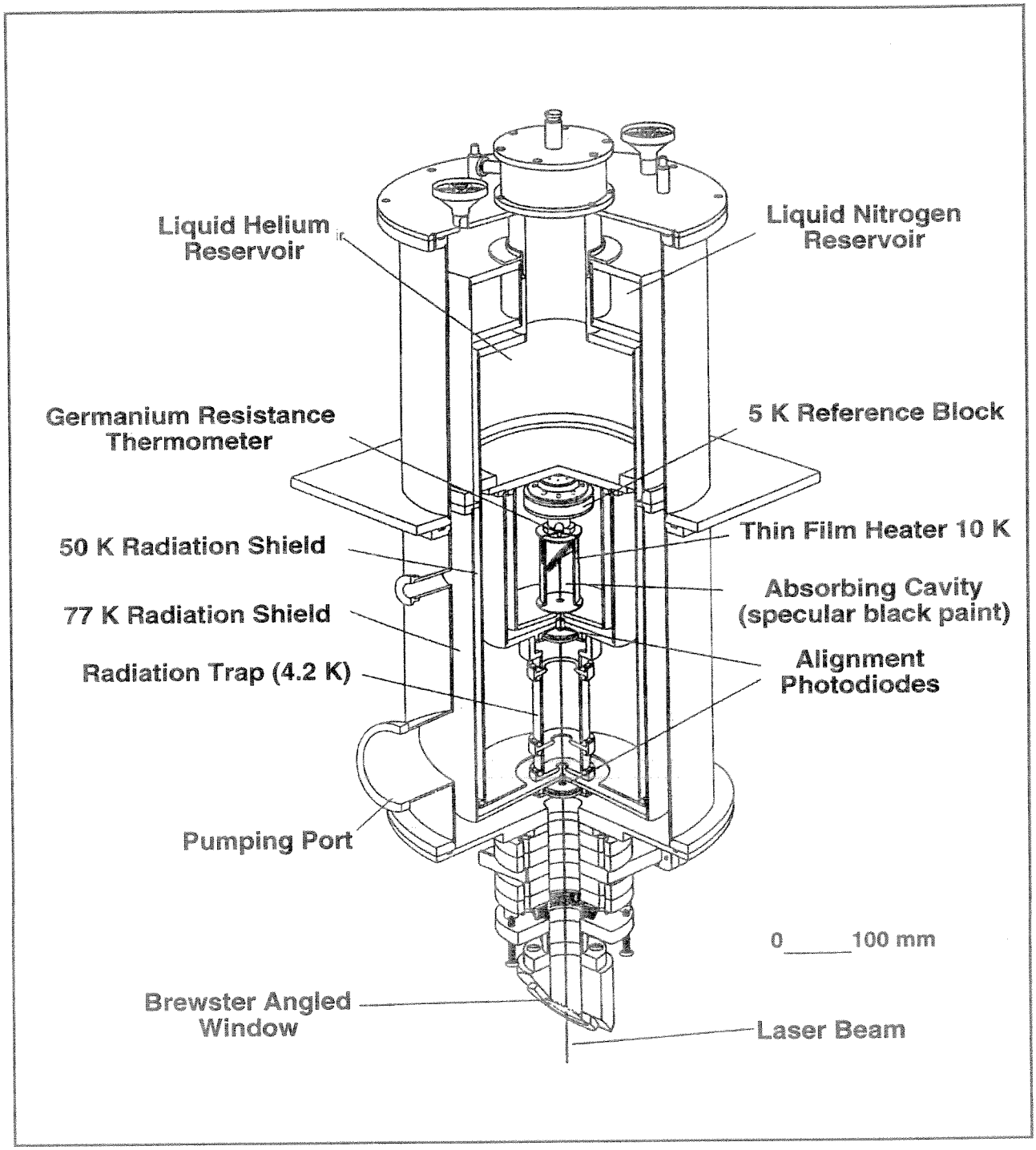

Figure 2. Sectional drawing of the NIST high resolution cryogenic radiometer.

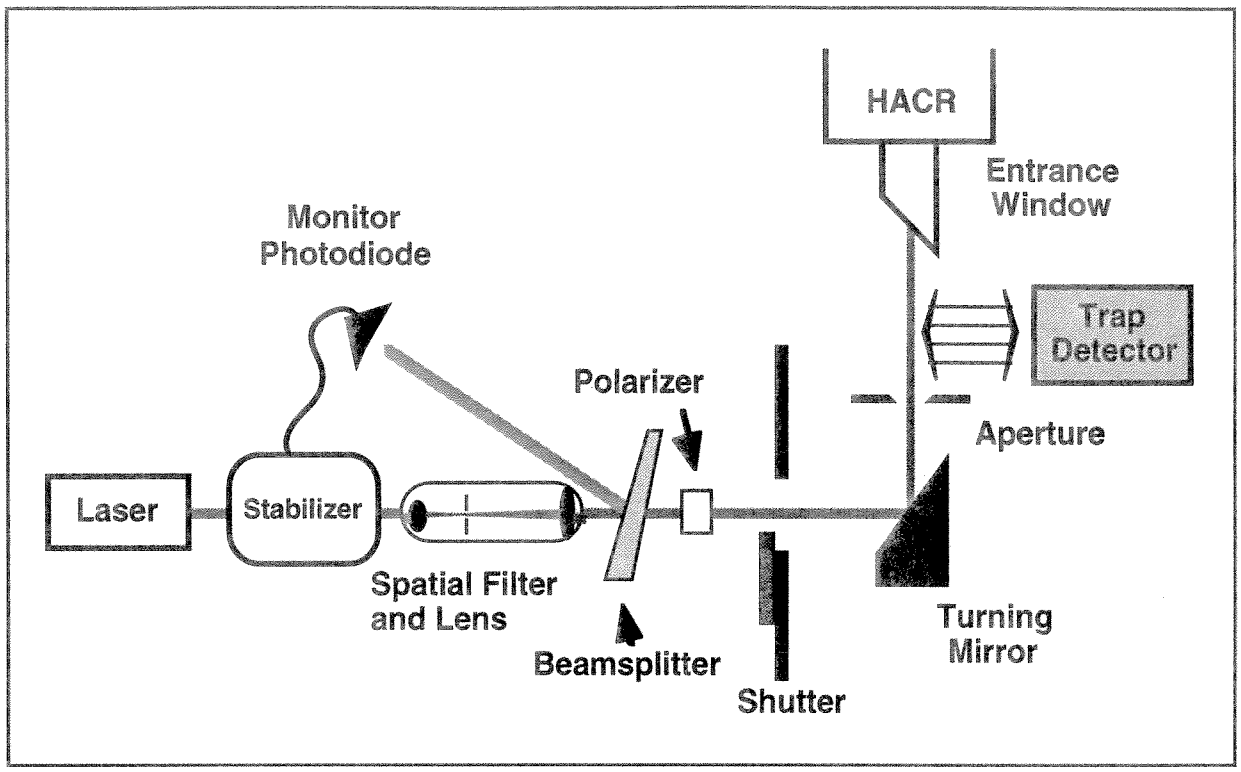

Figure 3. Schematic of the HACR optical arrangement used to characterize transfer standard detectors for use in other optical measurements. Various lasers provide radiation for wavelengths in the UV to the IR. Each wavelength used requires careful characterization of the entrance window for its transmittance and scattering properties.

The TSD can be calibrated directly using the HACR at selected laser wavelengths and by determining the responsivity for regions between the laser wavelengths from a knowledge of the physics of the detector. In the case of silicon photodiodes a considerable amount of effort has gone into modeling the responsivity as a function of wavelength with the result that the responsivity from 400 nm to 1000 nm can be accurately inferred [27]. Gentile and co-workers used this technique to ascertain the NIST unit of detector spectral responsivity with a relative combined standard uncertainty of less than 0.04 % in the wavelength range of 406 nm to 920 nm. Other types of detectors can be calibrated using this technique in different wavelength regions, including spectrally flat absorptive bolometer detectors and other semiconductor devices [18,28]. The complete calibration for semiconductor devices consists of determining the absolute spectral responsivity of the device as a function of wavelength based upon the HACR measurements and appropriate modeling. This information and data on the responsivity spatial uniformity and temperature stability of the detector allow the device to be used as a TSD in other spectral radiometric measurement circumstances.

As an alternative to having a semiconductor detector with a limited response range, a bolometer can be utilized as a TSD by carefully characterizing the stability and the spectral absorption of the absorbing surface material utilized on the bolometer. A careful characterization of the elements of the detector that determine its relative spectral response to a high accuracy allow it to be calibrated with the HACR at visible and near infrared (IR) wavelengths and its response elsewhere inferred from the relative spectral response of the device. In some wavelength regions lasers may not be readily available for use in the manner shown in Fig. 3. An approach to avoid this problem has been the development of cryogenic radiometers that operate with monochromatic light provided by conventional optical sources [29]. These sources typically have less optical power per unit wavelength than a laser and hence the use and characterization of the radiometer can require greater care to achieve high levels of accuracy. In all cases, use of a cryogenic radiometer relies upon the availability of suitable window materials which may present technical challenges in some wavelength regions.

III. Detector Spectral Comparators

A characterized TSD is employed in Detector Spectral Comparators (DSC) to calibrate a wide range of detector and detector-filter combinations. NIST has a variety of these instruments that operate from the vacuum ultraviolet (VUV) through the infrared (IR). A typical instrument is depicted in Fig. 4(a). The main component of a DSC is a high quality monochromator, usually a double monochromator to reduce stray light, and an appropriate assortment of light sources to span the designated wavelength region for the particular instrument [30]. The light exiting the monochromator is usually focused onto a point in space where a movable stage(s) can impose detectors destined for calibration. In most cases a portion of the exiting beam is intercepted with a monitor detector system used to normalize the data for fluctuations in the light sources. The monitor need not be absolutely calibrated but must be characterized for temporal and thermal stability at uncertainty levels consistent with the measurement objectives of the calibration scheme. One or more positions of the detector translation stage is occupied by a TSD or a detector calibrated directly with the TSD. This detector, often called the working standard detector, is used for the routine transferral of the absolute spectral responsivity units and is the subject of intense quality and reliability procedures to ensure maximum measurement accuracy.

The typical result of DSC measurements are curves such as shown in Fig. 4(b). These are representative plots of absolute responsivity in units of amperes/watt for several of the solid state detectors in widespread use. The data shown in Fig. 4(b) was taken with the UV and visible to near IR instruments at NIST. The chain of calibration has resulted in electrical power measurements in the HACR being transferred by a series of steps to determine the electrical response of a solid state device to optical power. As a result, the response of the photodetector is determined in terms of the electrical watt maintained by NIST in the form of voltage, current, and resistance standards [31]. Some of the NIST DSCs have a stage for translation of the detector vertically in the plane perpendicular to the incident light. This feature is labeled *x/y* scanning carriage in Fig. 4(a). The spot size of the incident beam is usually on the order of a millimeter but can be varied for other purposes by the focusing optics. The small size allows measurement of the spatial uniformity of a detector system which is important in circumstances where the detector system will be employed in an underfilled mode of operation and hence possibly show a sensitivity to the incident beam position on the detector. Additionally, the spatial uniformity may be a function of wavelength in certain semiconductor devices, and if left uncharacterized can cause

unwanted irregularity in system calibrations. NIST routinely supplies this information to calibration customers requiring spatial performance characteristics for detectors.

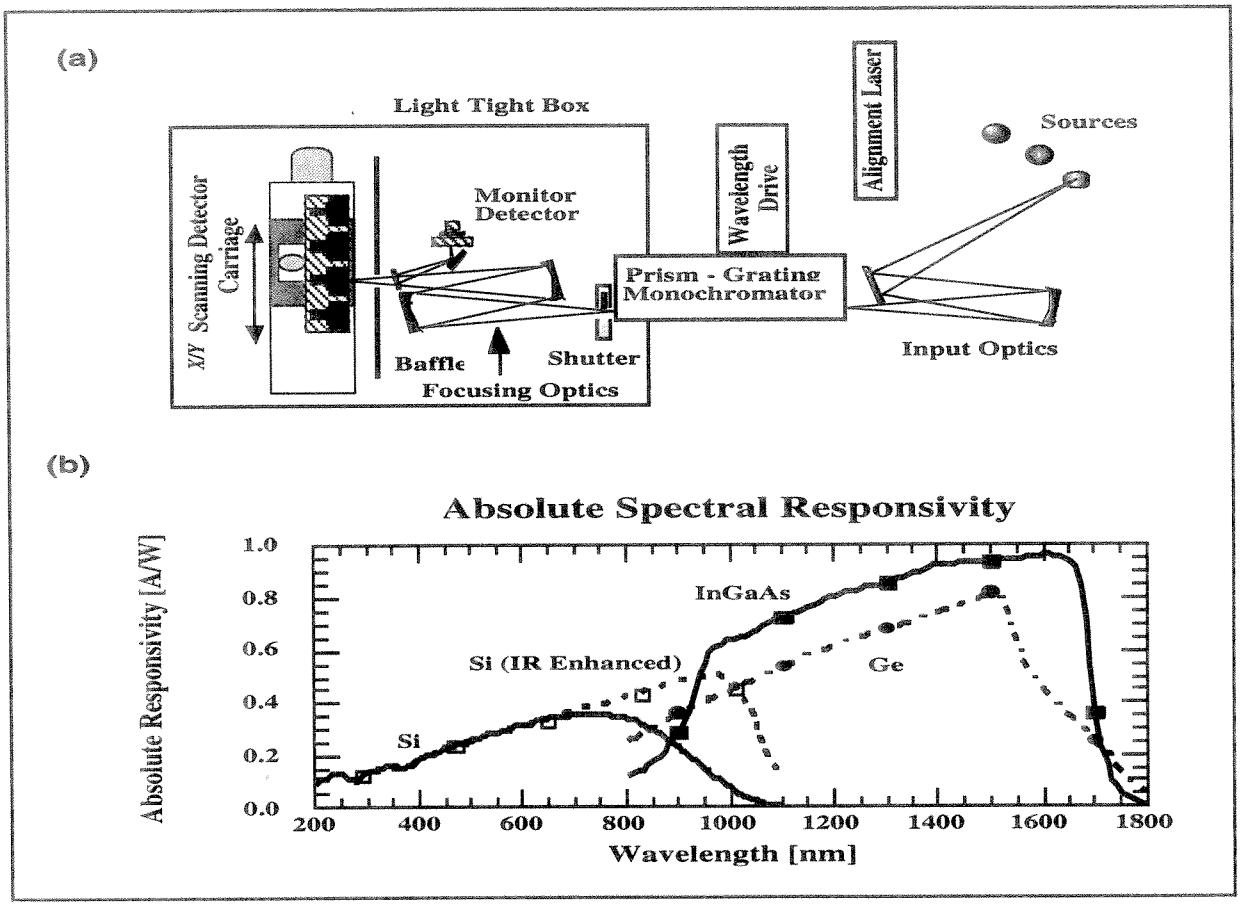

Figure 4. (a) Diagram of a typical detector spectral comparator instrument employed at NIST to characterize optical radiation detectors and detector systems.The major components of the instrument include appropriate light sources, a high quality monochromator, entrance and exit optics to convey the light to its intended points, and a mechanical arrangement such as translation stages to position the TSD or working standard detector and test devices in the beam.

(b) Typical characterization results of a selection of photodetectors. The vertical scale is absolute responsivity in units of A/W and the horizontal scale is wavelength in nm. Other types of photodetectors are used in the UV, Far UV and the IR.

A DSC is a versatile optical instrument which can be used for spectral transmittance measurements and other characterizations requiring a known optical beam. Important to the establishment of detector based optical units is the characterization of a photodetector coupled with an optical filter restricting the wavelength interval of transmittance. Such a device is often called a Filter Radiometer (FR). An FR can range from a simple silicon photodiode with a colored glass broadband filter to a sophisticated temperature controlled device designed for precision measurements. An example of the latter type of device is shown in Fig. 5 [32]. The FR system consists of a precision aperture to define the amount of light entering the system, a thermoelectric (TE) temperature controlled filter, and appropriate absorbing glasses to protect the system against unwanted radiation and environmental effects. (Depending upon use, the precision aperture may or may not be the limiting aperture in the optical system.) After propagating through the beam definition optics the radiation is collected by an appropriate detector. The device shown in Fig. 5 is modular and can support a wide range of filters and detectors by a simple mechanical interchange. Where necessary the detector module can be temperature controlled. Devices like this require considerable care in design and assembly to provide elimination of unwanted reflections and scatter of the radiation entering in the system.

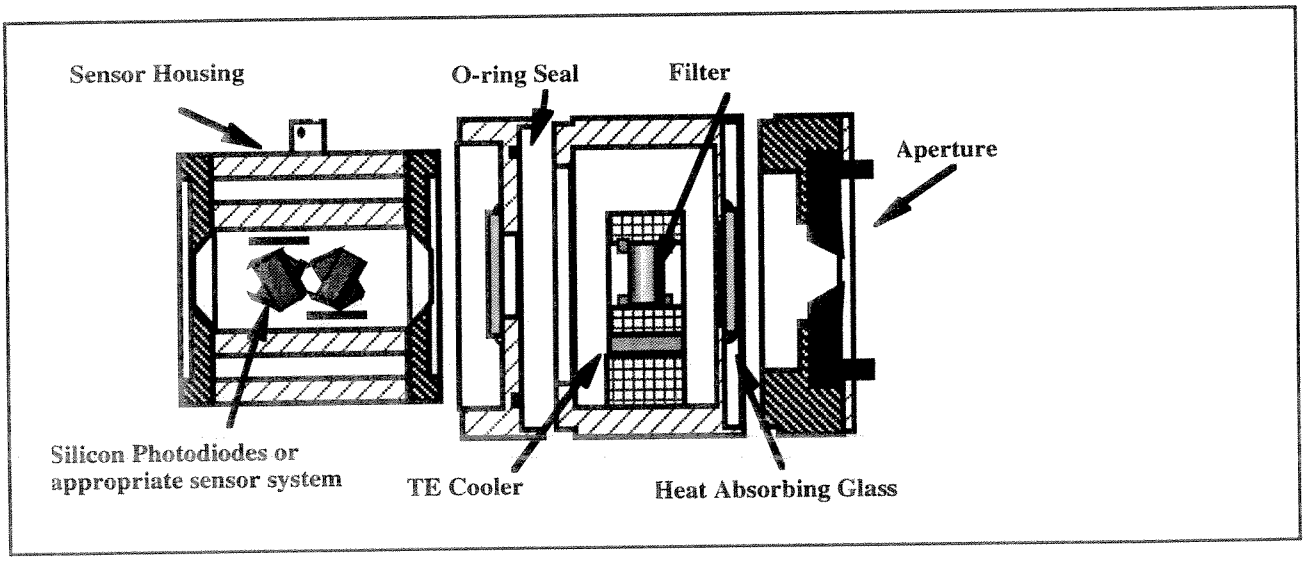

Figure 5. Cross section diagram of a typical filter radiometer system consisting of a precision aperture, filter, and sensor system. The NIST design is modular to provide the opportunity to use various filters and detector systems with some economy of components.

The absolute spectral responsivity of the resultant sensor system can be calibrated using the DSC facility. Figure 6 shows some typical examples of FRs calibrated at NIST for use in photometry and for implementing a detector based spectral radiance and irradiance unit. FR#2 with a peak response around 550 nm is a photometer and the 380 nm and 910 nm systems were designed for radiance temperature measurement research. FRs can be sensitive to beam divergence and polarization as well as exhibiting interference anomalies if a coherent radiation source is used. Consequently considerable care, calibration, and study must be directed toward the use of a FR in radiometry and photometry. Depending upon the light source to be measured by the FR, the out of

band rejection of the filter system must be characterized in detail and with sufficient accuracy to provide the measurement accuracy desired. As an example, if the system shown as FR#2 in Fig. 6 has a poor near IR rejection where a silicon detector has good sensitivity, large errors can result when used with an incandescent source which has large near IR output.

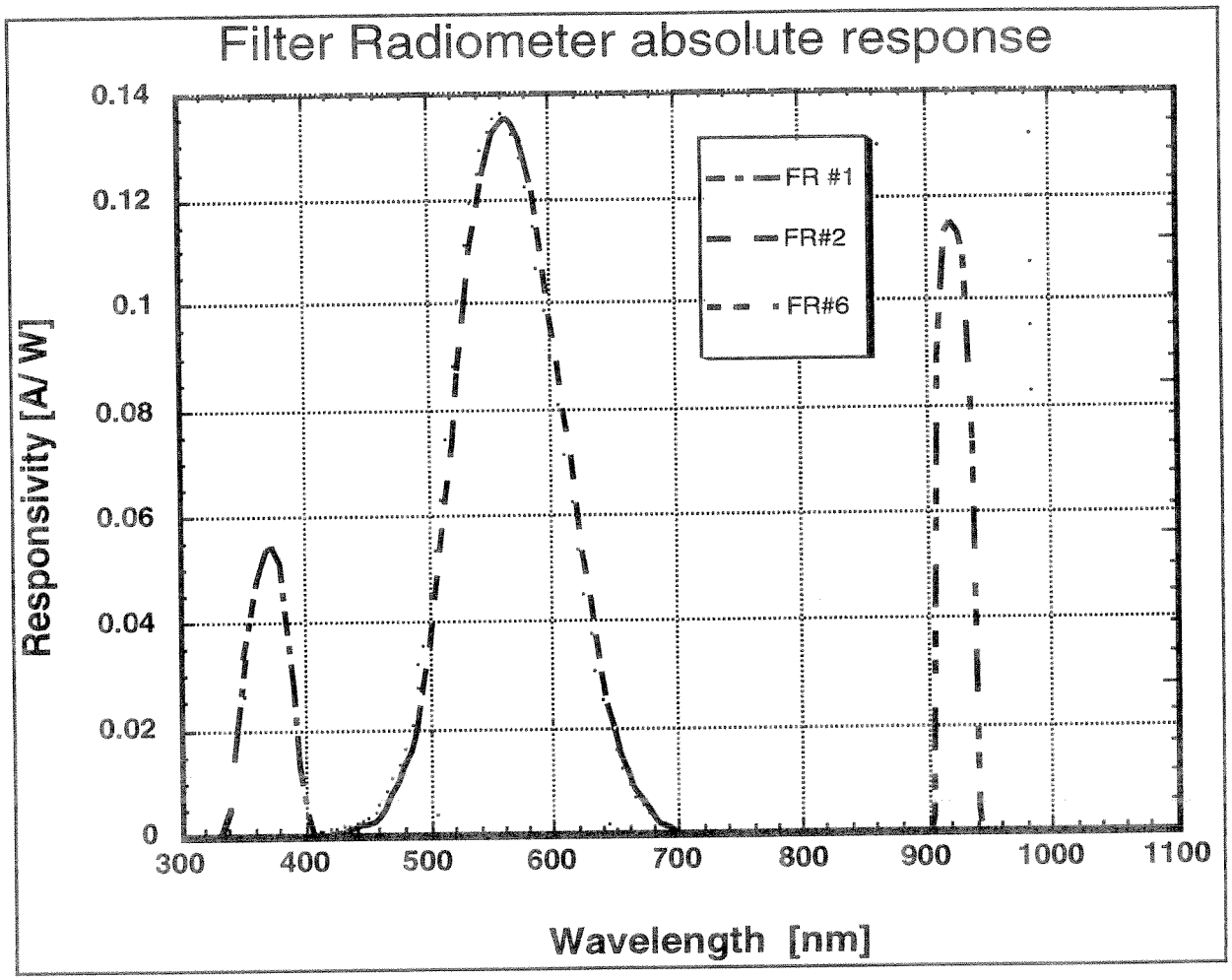

Figure 6. Examples of the calibration of filter detector systems in the DSC instrument. The vertical scale is absolute responsivity in A/W and the horizontal scale is wavelength in nm. These examples represent a UV filter, FR#1, a photopically corrected filter radiometer, FR#2, and a near IR system, FR#6.

A calibration scheme based upon the HACR has allowed the accuracy of DSC performed calibrations to be significantly improved over that reported in Ref. 30 when the instrument was first constructed [25]. The relative combined standard uncertainty for the detector response measurements now is in the 0.1 % range in the visible (400 nm to 900 nm) using silicon detectors and 0.2 % to 1.3 % in the near IR for germanium devices. In the UV region (200 nm to 400 nm), the relative expanded uncertainty is 1.75 % to 0.1 % with the higher uncertainty in the shorter wavelength region. As our understanding of the physics of these devices improves, the uncertainties associated with interpolating the spectral response between the laser wavelengths will continue to diminish with a corresponding decrease in the uncertainty of calibrated detectors that NIST provides.*

An alternate method of calibrating an FR was developed by Schaefer and his collaborators at NIST [33]. This technique utilized a dye laser system which featured wavelength tunability and provided the capability of scanning over the wavelength range of the filter's transmittance. The laser power could be directly determined with a calibrated detector and the absolute response of the FR inferred. It was found that care had to be exercised to account for artifacts of the measurement introduced by the coherent properties of the laser radiation. While the coherence aspect adds an extra dimension to the practical utilization of the FR calibrated using a dye laser system, it is a manageable matter and this technique offers the possibility of high accuracy direct calibration of FR systems based upon a cryogenic radiometer. Schaefer and his colleagues reported a relative combined standard uncertainty of 0.18 % in their system using an absolute silicon detector system for the reference.

IV. Filter Detector Systems and Use

a) Photometry and Colorimetry

Photometry is the science of light measurement in a manner proportional to human visual response according to an accepted average human visual response function. The internationally accepted standard in this regard is the CIE spectral luminous efficiency function for photopic vision, usually designated as $V(\lambda)$ [2, 34]. This function is shown as the curve labeled "green" or $\bar{y}$ in Fig. 7. The other curves plotted in Fig. 7 are the CIE color matching functions "red" or $\bar{x}$ and "blue" or $\bar{z}$ used to define points in the CIE color coordinate system [2,14,35]. The definition of the candela and the $V(\lambda)$ function provide a means of coupling the photometric and radiometric units shown in Table 1 in the manner described below.

Let Q_λ represent the general radiometric quantity on the left side of Table I and Q_v represent the general photometric equivalent function, then,

$$Q_v = K_m \int_\lambda Q_\lambda V(\lambda) d\lambda \quad . \tag{1}$$

K_m is the luminous efficacy defined by the CIPM to be 683 lm/W for photopic vision [11]. The range of the integral has practical limits restricted to the region of non-zero values for $V(\lambda)$. Figure 8 illustrates a typical measurement configuration for a light source and filter detector system. A source is placed a distance r from the detector system whose input is determined by the amount of

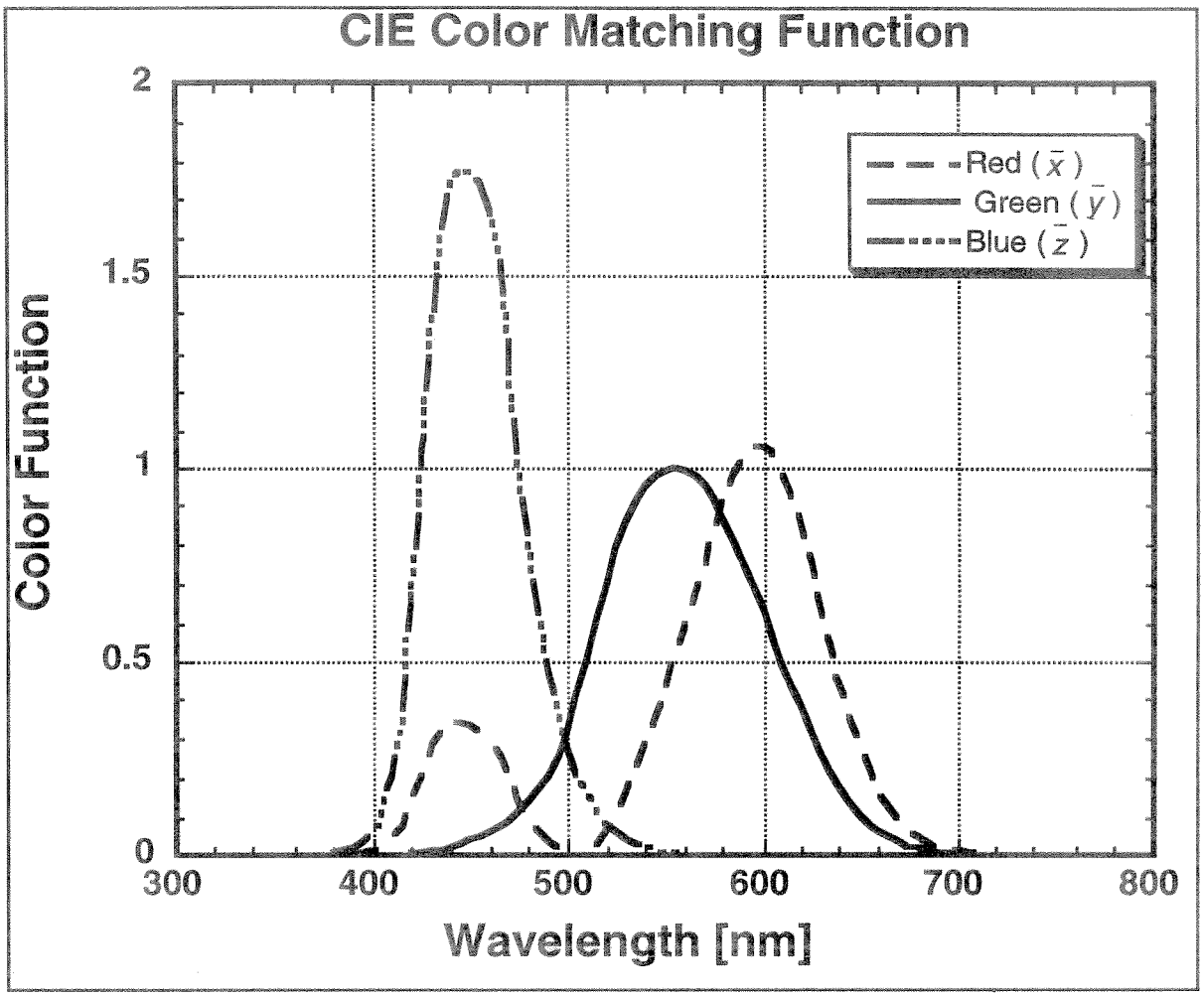

Figure 7. CIE color matching functions. The curve labeled "green" is the spectral luminous efficiency function for photopic vision, V(λ) .

optical power entering the precision aperture of area *A*. In most configurations in photometry and radiometry one would choose the distance *r* large compared to the dimensions of the aperture and the source size. For utmost precision one can consider the appropriate configuration factors for the total system of source and receiver. For our purposes we shall assume the limit where the source size is approximated by a point source, the aperture is sufficiently small so that there are no variations in the light flux distribution over the aperture, and the responsivity is appropriately area averaged in order to avoid integration over the aperture.

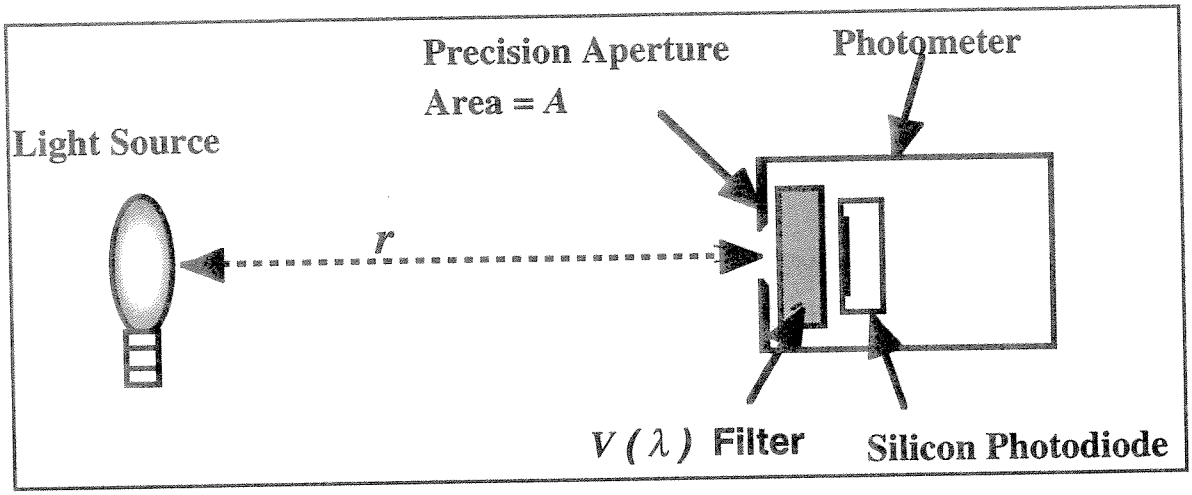

Figure 8. Schematic of a setup for using an absolutely calibrated photometer to perform luminous intensity and illuminance measurements. The distance, r, is large compared to the size of the lamp and the dimensions of the photometer's aperture. The distance, r, is measured from the lamp filament to the aperture of the photometer.

The photometer is calibrated on the DSC and has an absolute spectral responsivity given by $s(\lambda)$ [A/W]. The uniform irradiance of the source $E_\lambda(\lambda)$ on the aperture A produces a current i_0 from the detector systems,

$$i_0 = A \int_\lambda \bullet E_\lambda(\lambda) \bullet s(\lambda) \mathrm{d}\lambda \ . \tag{2}$$

The filter is designed such that its transmittance combined with the responsivity of a photodetector produces a response of the FR nearly proportional to the $V(\lambda)$ function. An example of such a detector's response is indicated as FR#2 in Fig. 6.

The responsivity of the photometer to the light in terms of luminous flux can be defined as shown in the equation,

$$i_0 = A \bullet R_{v,f} K_m \int_\lambda E_\lambda(\lambda) \bullet V(\lambda) d\lambda \ , \tag{3}$$

where $R_{v,f}$ is the photometric response of the system to luminous flux measured in terms of A/lm. Eliminating i_0 between eqs. (2) and (3) results in

$$R_{v,f} = \frac{\int_\lambda E_\lambda(\lambda) \bullet s(\lambda) d\lambda}{K_m \bullet \int_\lambda E_\lambda(\lambda) \bullet V(\lambda) d\lambda} \ . \tag{4}$$

To the extent that $s(\lambda)$ and $V(\lambda)$ have the same functional form, eq. (4) reduces to having the lumen response determined in terms of the ratio of the absolute response at 555 nm and the luminous efficacy. This is evident if one writes,

$$s(\lambda) = s(555) \bullet s_n(\lambda) \ , \tag{5}$$

where $s_n(\lambda)$ is the spectral responsivity normalized to the value at 555 nm.

The luminous flux responsivity then can be written,

$$R_{v,f} = \frac{s(555) \bullet \int_{\lambda} E_{\lambda}(\lambda) \bullet s_n(\lambda) d\lambda}{K_m \bullet \int_{\lambda} E_{\lambda}(\lambda) \bullet V(\lambda) d\lambda} \quad . \tag{6}$$

If the functional forms of $s_n(\lambda)$ and $V(\lambda)$ are sufficiently close one can write,

$$R_{v,f} = \frac{s(555) \bullet (1.0 + \text{corrections})}{K_m} \quad . \tag{7}$$

Knowing $E_{\lambda}(\lambda)$, the correction terms can be calculated for the spectral distribution of various sources. These matters are discussed extensively in the technical literature and will not be reproduced here [2,36].

Assuming the luminous flux Φ is uniform over the aperture A, we can write,

$$\Phi_v = E_v A \, , \tag{8}$$

where E_v is the illuminance and conclude that the illuminance responsivity $R_{v,i}$ is,

$$R_{v,i} = A R_{v,f} \quad . \tag{9}$$

In the approximation that the source is a point source the illuminance is related to the luminous intensity by well known inverse square law,

$$E_v = \frac{I_v}{r^2} = \frac{i_0}{R_{v,i}} = \frac{i_0}{AR_{v,f}} \quad . \tag{10}$$

We can write the luminous intensity I_v expressed in candela as,

$$I_v = \frac{i_0 r^2}{AR_{v,f}} \quad . \tag{11}$$

Keeping in mind that $R_{v,f}$ was determined by a direct measurement on the DSC utilizing eqs. (6) and (7), it is noted that the SI unit of the candela is derived directly from the primary detector standard and that the auxiliary unit for illuminance in lux or lm/m^2 is similarly derived. Employing the wide dynamic range of photopically corrected detector systems, a single calibrated instrument can serve to establish luminous intensity and illuminance units over a broad range and removes the necessity of every calibration laboratory maintaining a large inventory of lamps to provide complete calibration coverage [32].

Light sources used for illumination are rated in terms of the total luminous flux output, often abbreviated to luminous flux, measured in lumens. The measurement of the luminous flux involves the integration of the luminous intensity of the source over the total solid angle of illumination, ordinarily 4π sr. This is usually accomplished with a goniophotometer which uses a calibrated photometer in a mechanical arrangement to move the photometer over the solid angle of interest [37]. This method lends itself to immediate application of standard detectors because a photometer can be directly calibrated as an illuminance meter and upon geometric considerations and suitable summation of signals, the luminous flux is directly deduced.

A second frequently used integration method is the use of an integrating sphere for averaging the output of a particular source and deriving its luminous flux by comparison to a known source in the same sphere. This method relies upon the availability of a luminous flux standard source and the ability to make appropriate corrections for source configuration issues. NIST has recently developed a new method utilizing an integrating sphere but relying upon the comparison to a known externally provided luminous flux introduced into the sphere by a measured illuminance within a defining aperture [38,39] .

Figure 9 illustrates the main features of the NIST integrating sphere approach to a direct detector measurement of the luminous flux. A critical aspect of this approach has been the development of techniques to characterize the integrating sphere for effects from sources that supply luminous flux in different manners. An illuminance or irradiance standard lamp is used as a source of external radiation with the only requirements on its performance being stability of output and operation at an identified color temperature. A precision aperture of area A defines the amount of luminous flux that will enter the sphere through an opening.

The standard illuminance meter measures the illuminance E_v behind the aperture, and assuming the flux is homogeneous in space, the total flux Φ_{in} entering the sphere is,

$$\Phi_{in} = E_v \bullet A \quad [\text{lm}] \quad . \tag{12}$$

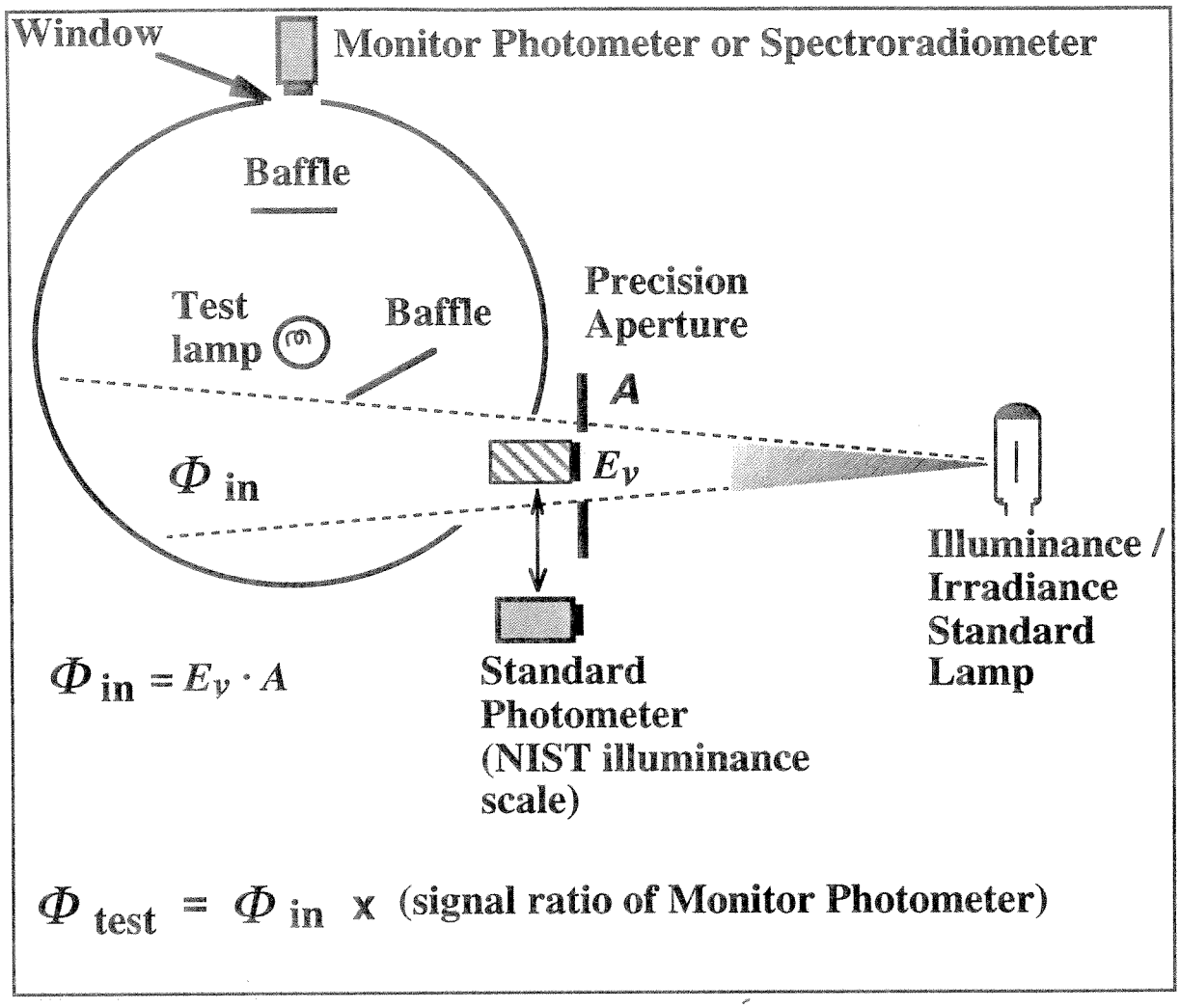

Figure 9. Schematic diagram of the integrating sphere method NIST uses to determine luminous flux based upon the detector candela.

The monitor photometer or spectral radiometer records the signal as a result of supplying the known flux. The test lamp is then placed into operation and the external source eclipsed with a shutter. A new reading on the monitor allows for determination of the luminous flux of the test lamp by the comparative equation,

$$\Phi_{test} = \Phi_{in} \bullet (\text{monitor signal ratio}) \bullet (\text{corrections}) \quad . \qquad (13)$$

The corrections depend upon angular correction factors for light impinging upon different regions of the sphere and for the fact that the external light impinges upon the sphere at an oblique angle whereas the test lamp provides illumination at nearly normal incidence. Other corrections can occur for color temperature variations between the external source and test lamp. All these corrections are small, with the largest on the order of 1 % and smallest on the order of a few tenths of a percent. Ohno has written a detailed analysis of the correction strategy and the reader is referred to the original literature for the details [13,40]. NIST believes that the luminous flux unit can be maintained in this manner to a relative combined standard uncertainty of 0.3 %. The wide dynamic range of the photometer allows for a characterization of the sphere and the calibration of a lamp at a given lumen level to be transferred to other lamps over a large range of lumen values.

As a practical matter for calibration purposes it is convenient to calibrate a selection of standard lamps using the absolute method described above. These standard lamps can be used to calibrate other lamps by ordinary substitution methods employing the sphere. Periodically the sphere must be checked and the standard lamp calibrations verified. The characterization of the sphere described in the references is a straightforward procedure and can be duplicated in most well equipped photometry laboratories and provides a mechanism for other laboratories to establish a luminous flux unit based upon calibrated photometers. A single calibrated photometer could then be used to assure the maintenance of a number of photometric quantities with good stability and accuracy. It might be necessary to have periodic measurement verifications provided by NIST to ensure that the procedures developed in an individual laboratory are correct and maintained over time. Implementing these procedures could result in considerable savings to calibration laboratories by not maintaining large selections of calibration artifacts. NIST encourages its major customers to consider this strategy for incorporation into their long term planning. An update to the NIST SP250 document that describes the photometric calibration program at NIST and which contains many details of how to establish the detector based photometric program is in preparation [41].

An extensive discussion of colorimetry is beyond the scope of this Technical Note. Hence the discussion will be limited to the strategy for measurements based upon detectors. Colorimetry consists of measuring either direct, reflected, or transmitted radiation with sensor systems whose responses are weighted as shown in Fig. 7. The result is a set of numbers which define a point in a suitably chosen color coordinate space. Detector filter systems can be constructed that give relative responses that are proportional to the curves in Fig. 7 and can be calibrated on the DSC in the same manner as the photometer. In fact the "green" curve in Fig. 7 is the $V(\lambda)$ curve. Appropriate corrections for errors introduced by differing source spectral distributions and other effects can be determined to provide a strategy to utilize the DSC calibrated detectors to maintain colorimetric measurements. This project is in its early stages at NIST and will be reported on at an appropriate time.

b) Spectral Radiometry

The spectral radiance and irradiance units have traditionally been based upon the use of blackbody sources with temperatures defined in terms of accepted melting or freezing points of materials [4,5]. The blackbody sources are characterized to ensure their spectral output can be correctly described by Planck's radiation law. Recently Mielenz, *et al.* determined the freezing point of gold using calibrated detectors to determine the absolute spectral radiance within a selected wavelength band and inferred the temperature by application of Planck's radiation law [42]. Using the ideas

developed by Mielenz, *et al.* NIST has designed a FR based system coupled with a variable temperature blackbody to maintain the units of spectral radiance and irradiance [43, 44]. This realization is based upon concepts associated with the conservation of radiance in a nonabsorbing medium with a constant index of refraction [14, 45]. Figure 10 illustrates the basic geometry and ideas associated with the method employed to determine the irradiance and radiance units. If A_1 and A_2 are the areas of aperture 1 and aperture 2 respectively, the flux $\Delta\Phi$ emergent through A_2 can be expressed as

$$\Delta\Phi = \frac{L \bullet A_1 \bullet \cos\theta_1 \bullet A_2 \bullet \cos\theta_2}{d^2} \quad [W] \ , \tag{14}$$

where L is the radiance of the wide aperture source, d is the distance between the midpoints of the apertures and the θs are the angles defining the inclination of the apertures with respect to the central ray passing through the midpoints of the area elements [45]. These concepts can be generalized for apertures of an arbitrary size by considering the limit of small areas in eq. (14) and summing contributions from the elements of area using integration techniques. In this connotation the areas A_1 and A_2 become elements of area of larger apertures at the positions indicated in Fig. 10. Using this idea and letting the elements of area become differentials, the total flux Φ exiting aperture A_2 can be determined by integrating the radiance over the two apertures,

$$\Phi = \int_{A_1}\int_{A_2} \frac{L \bullet dA_1 \bullet \cos\theta_1 \bullet dA_2 \bullet \cos\theta_2}{d^2} \quad [W] \ . \tag{15}$$

In the general circumstance this is a complicated integration because the radiance may vary over the aperture and the distance d is a function of the position on the apertures. Our application provides some simplifying and useful conditions which make the problem tractable in mathematical form. The sources to be employed for radiance and irradiance measurements are Lambertian sources and have sufficiently large extent to completely overfill the aperture A_1. Additionally the detector has a diameter sufficient to intercept all the radiation exiting through aperture A_2. This field of view is delineated by the extreme rays shown in Fig. 10. With these assumptions, L is constant and can be removed from the integrals. The result is often conveniently written;

$$\Phi = L \bullet \int_{A_1}\int_{A_2} \frac{dA_1 \bullet \cos\theta_1 \bullet dA_2 \bullet \cos\theta_2}{d^2} \quad [W] \tag{16}$$

$$= L \bullet A_1 \bullet \pi \bullet F_{1\to 2} \ ,$$

where $F_{1\to 2}$ is the configuration factor defined for the two apertures [45,46]. For the circumstance we are exploring, $F_{1\to 2}$ is given by the following:

$$F_{1\to 2} = 1/2[x - [x^2 - 4 \bullet (\frac{R_2}{R_1})^2]^{1/2}] \ ,$$

$$x = 1 + \frac{(1 + R_2^2)}{R_1^2} \ , \tag{17}$$

$$R_1 = \frac{r_1}{d} \ , R_2 = \frac{r_2}{d} \ ,$$

where r_1 and r_2 are the radii of the apertures A_1 and A_2 respectively. It is convenient to rewrite eq. (16) in terms of the variables, r_1, r_2, and d, to obtain insight into its application.

$$\Phi = L \bullet \frac{\pi^2}{2} \bullet [(r_1^2 + r_2^2 + d^2) - [(r_1^2 + r_2^2 + d^2)^2 - 4 \bullet r_1^2 \bullet r_2^2]^{1/2}] \tag{18}$$

The quantity $(r_1^2 + r_2^2 + d^2)$ can be factored out and since d is much larger than the radii of the apertures, the expression can be expanded using the binomial expansion with the following result:

$$\Phi = \frac{L \bullet \pi \bullet r_1^2 \bullet \pi \bullet r_2^2}{(r_1^2 + r_2^2 + d^2)} \bullet (1 + \frac{r_1^2 \bullet r_2^2}{(r_1^2 + r_2^2 + d^2)^2} + \ldots)$$

$$= \frac{L \bullet A_1 \bullet A_2}{D^2} \bullet (1 + \delta + \ldots) \ , \ , \tag{19}$$

$$D^2 = (r_1^2 + r_2^2 + d^2), \ \delta = \frac{r_1^2 \bullet r_2{}^2}{D^4} \ .$$

The major functional relation in eq. (19) can be seen to evolve directly from eq. (14) if the angles are assumed small and the distance between the two apertures is large compared to the dimensions of the apertures. For this discussion it is assumed that the apertures are large compared to the wavelength of light being used and hence diffraction and interference effects can be ignored. In some cases in radiometry and photometry this approximation may not be valid.

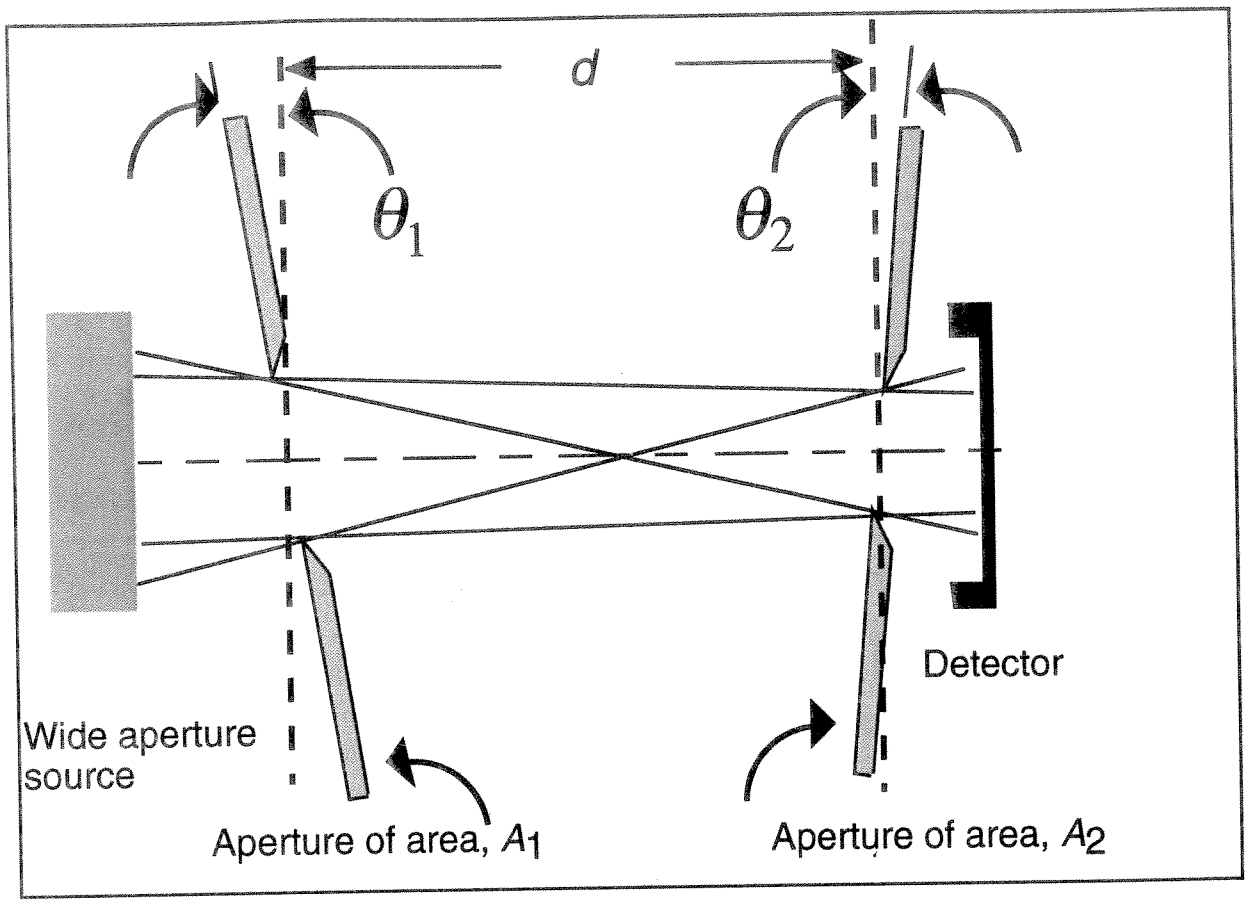

Figure 10. Diagram illustrating relationships for the fundamental concepts in the measurement of radiance and optical power. The vertical dotted lines represent two reference planes separated by a distance, d. Two apertures, A_1 and A_2, determine the geometry of the arrangement and the amount of optical power incident upon the detector from the wide aperture source.

In the NIST implementation of the direct radiance determination, the radii r_1 and r_2 are 3 mm and 2 mm respectively and d is 500 mm: hence the first correction in the brackets, in eq. (19), is on the order of 1.4×10^{-4}. For most applications with these types of dimensions the radii squared terms can be neglected with respect to d^2 in the denominator terms. The variable temperature blackbody source is designed to provide a spatially uniform beam and hence we can write the irradiance in the plane of aperture 2 as,

$$E = \frac{\Phi}{A_2} = \frac{L \bullet A_1}{D^2} \bullet (1 + \delta + \ldots) \ . \tag{20}$$

The same equations govern the respective spectral quantities where the radiance L is replaced by the spectral radiance L_λ. Detector systems shown in Figs. 5 and 6 can be used to deduce the temperature of the wide aperture variable temperature blackbody source and hence establish units of spectral radiance and irradiance and radiation temperature. This technique relies upon knowing the aperture areas to at least the intended accuracy of the measurement or as a practical matter, somewhat better than the desired accuracy. To assist in the achievement of the highest accuracy in these measurements, NIST has developed a new facility to characterize apertures employed for radiometric and photometric purposes. The facility features the capability of aperture area measurement with a relative combined standard uncertainty of 0.04 % [47].

The NIST system designed to determine the spectral radiance and irradiance units is shown schematically (distances not to scale) in Fig. 11. The configuration meets the criteria for overfilling aperture A_1 and having sufficient aperture to collect all the light exiting aperture A_2. The spectral responsivity of the detector, $s(\lambda)$, is determined and the responsivity spatial uniformity characterized in the DSC. It is important to understand the spatial uniformity since the detector is underfilled and in some cases detectors have shown position sensitive responsivity. In cases where the response variations are large enough to affect the measurement accuracy, the spatial response should be appropriately averaged over the area of the detector to be utilized in the experiment. With these assumptions the output current of the detector system is,

$$\begin{aligned} i_0 &= \int_\lambda \Phi_\lambda(\lambda) \bullet s(\lambda) \bullet \mathrm{d}\lambda \\ &= \frac{A_1 \bullet A_2}{D^2} \bullet (1 + \delta + \ldots) \int_\lambda L_\lambda(\lambda) \bullet s(\lambda) \bullet \mathrm{d}\lambda \quad . \end{aligned} \tag{21}$$

The spectral radiance $L_\lambda(\lambda)$ and spectral radiant flux $\Phi_\lambda(\lambda)$ are known functions of wavelength λ and absolute temperature T and are given by the well discussed Planck radiation law [45,48]. Equation (21) can be numerically solved to find a value of temperature that satisfies the conditions of the equation. The accuracy of the temperature determination is directly related to the accuracy of the determination of geometric quantities, the current, and the FR spectral responsivity, $s(\lambda)$. It is important to have the FR characterized over the entire wavelength range of sensitivity of the photodiode or other photo-conversion device to account for any out-of-band problems in the filter used. For example, if the filter has significant infrared leakage and the detector is a silicon photodiode, significant errors can result due to the increasing output of thermal sources in the infrared. These issues have been discussed in the literature [42-44]. NIST expects temperature to be determined to within 0.10 K [49]. As a check on stability and to provide redundancy of measurement, several FRs will be used to determine the temperature and to monitor the calibration procedures.

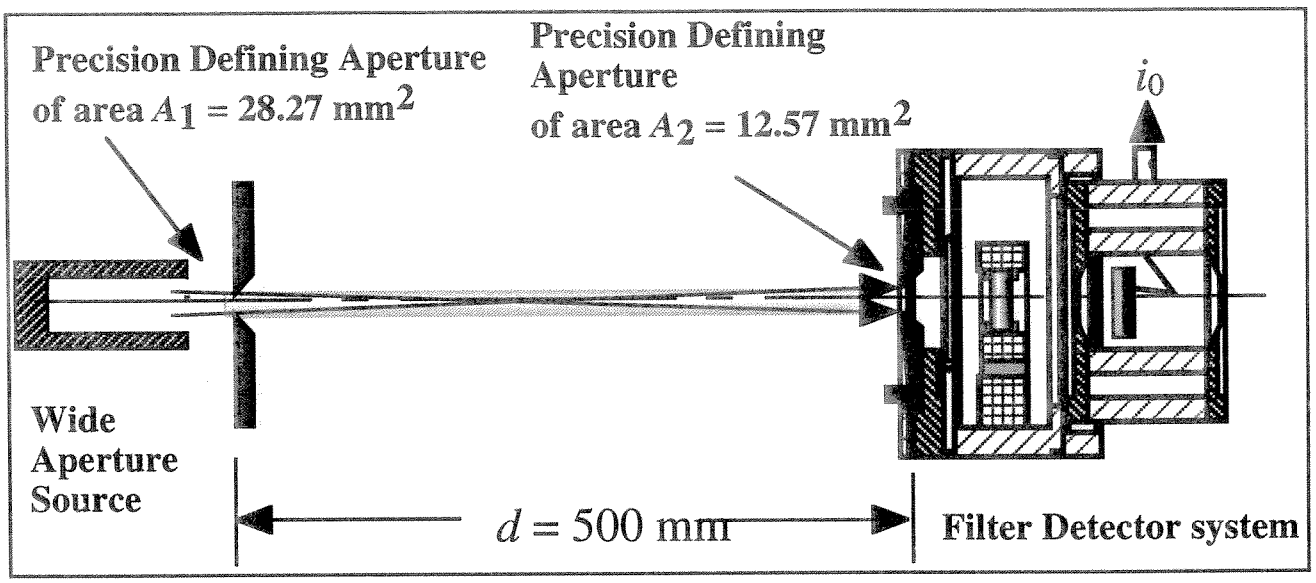

Figure 11. Schematic diagram of NIST apparatus to determine scales of spectral radiance and irradiance. The linear dimensions are not to scale in order to better show the details of the measurement. The wide aperture blackbody source has an opening of 17 mm and is placed approximately 60 mm behind the first aperture. The 10 mm square detector is approximately 43 mm behind aperture A_2.

The spectral irradiance $E_\lambda(\lambda)$ can be obtained by examination of eq. (20) when it is rewritten in the spectral form,

$$E_\lambda(\lambda) = \frac{\Phi_\lambda(\lambda)}{A_2} = \frac{L_\lambda(\lambda) \bullet A_1}{D^2} \bullet (1 + \delta + \ldots) \quad . \qquad (22)$$

When the spectral irradiance is measured at NIST, an integrating sphere is used in conjunction with a known aperture and a monochromator. Hence the aperture A_2 designated in eq. (22) is not necessarily the same one used in the temperature determination but it must meet the same dimensional requirements discussed above in terms of geometrical constraints. In practice the known spectral irradiance of the blackbody is used to calibrate the combined integrating sphere and monochromator system and determine the spectral irradiance of other sources by relative measurement. The spectral radiance measurements will be made utilizing an imaging system in conjunction with the monochromator system employed for the irradiance work. In normal operation a working standard lamp may be used to transfer from the variable temperature blackbody to calibration test lamps. In this arrangement the FRs can be used to check the stability of the measurement technique with time.

The procedures outlined here provide a mechanism to establish source spectral units in terms of a FRs absolute spectral responsivity. This responsivity is directly traceable to the HACR and geometric configuration factors which can accurately be determined. The same procedures can be carried out by other laboratories to establish and maintain their source spectral units and could result in better stability of the calibration endeavor and perhaps a savings in the purchase and maintenance of source standards.

c) Pyrometry

The accurate radiometric determination of the gold point was the first step in establishing the temperature unit based upon absolute detectors [42]. The procedures outlined in Ref. [44] and in the solution of eq. (21) in the previous section define the temperature unit based upon absolute radiometry. The increasing availability of high quality infrared and near infrared detectors afford the opportunity to extend this methodology to even lower temperatures. It is important to characterize the quality of the blackbody sources used in these calibration strategies in order to ensure uniformity, high emissivity, stability, and account for any diffraction effects. Efforts are underway at NIST to develop control techniques for blackbody sources that have a radiometric sensor for the input to the feedback system and thus stabilize the system for the parameters of concern. The Special Publication [9] describing pyrometry at NIST is being rewritten and should be available in the near future.

The discussions in these sections have focussed on the use of FR systems using interference filters or other bandpass limiting mechanisms. The concepts developed do not depend on a particular technology for providing the bandpass limiting mechanism and in fact could include well characterized dispersive instruments using gratings or prisms. As the technology develops it may be possible to consider dispersive instruments with array detectors that capture a portion of the spectra and can define temperature directly as well as provide increased speed in determining spectrum distributions. Fourier transform spectroscopic devices offer some hope for application in this area but will require further development of the procedures to characterize these instruments for full spectroradiometric use.

V. Conclusions and Suggestions

The advent of cryogenic electrical substitution radiometers with unprecedented accuracy has provided the opportunity to recast the procedures and techniques utilized to maintain radiometric and photometric units. In the case of photometry the impetus for change is further assisted by the development of stable, reliable, and inexpensive silicon photodetectors for use in photometric measurements. The availability of high quality solid state current amplifiers allows silicon detector systems to provide measurement over many decades of optical or photometric power. These detector systems can be calibrated at NIST or other calibration laboratories and, with the measurement strategies outline above, photometric and radiometric units can be defined and maintained for the calibration of many types of optical sensing equipment. As pointed out in the photometry section of this Technical Note, the maintenance of a single photometer by an organization interested in photometric measurement could suffice to define all the calibration parameters ordinarily required and thereby obviate the need for the care and maintenance of a large number of lamp standards.

Obtaining the national optical measurement units from an accurate cryogenic radiometer allows for their simultaneous improvement as the techniques for better utilization of the cryogenic radiometer are developed. While improvement in the accuracy of the cryogenic radiometer itself would not

necessarily be of immediate benefit, the ability to perform improved transfer measurements to other devices can produce corresponding improvements to the measurement chain. Improvements in transfer standard detectors in all wavelength regions will assist the efforts to propagate the benefits of the high accuracy of the HACR to radiometric enterprises in general. NIST has programs in these areas to develop better mechanisms for calibrations in the infrared and the ultraviolet. An additional effort is underway to improve the accuracy of the NIST synchrotron ultraviolet radiation facility, SURF II, by relating its spectral output to the HACR through a FR system. The SURF II facility provides a source of radiation from about 1 nm to the far infrared for use in a variety of scientific endeavors including far UV radiometry. This will assist the effort to unify the NIST radiometric units maintained in differing ways by various technologies.

NIST customers of radiometric and photometric services are encouraged to renew their thinking on calibration strategies for the future to take advantage of the savings and increased accuracy suggested by the developments outlined in this note. Using a well characterized detector system offers the possibility of a significant reduction in the number of calibration artifacts necessary to maintain a direct traceability to NIST.

References

* Uncertainties in this technical note follow the nomenclature and suggestion in B.N. Taylor and C.E. Kuyatt, "Guidelines for Evaluating and Expressing the Uncertainty of NIST Measurement Results," NIST Technical Note 1297, U.S. Government Printing Office, Washington, DC 20402-9325, 1994.

[1] See the collection titled "The Theory of Heat Radiation," volume 11 of the American Institute of Physics collection in the History of Modern Physics, 1988.

[2] CIE Proceedings 1924, Cambridge University Press, Cambridge, 1926,

"The Basis of Physical Photometry," Publication CIE number 18.2 , CIE , Kegelstrasse 27, A-1030, Vienna, 1983.

[3] B.N. Taylor, "Guide for the Use of the International System of Units (SI)," NIST Special Publication 811, 1995, U. S. Government Printing Office, Washington, DC 20402-9325, 1995.

[4] J.H. Walker, R.D. Saunders, J.K. Jackson, and D.A. McSparron, "Spectral Irradiance Calibrations," NBS Special Publication SP250-20, U. S. Government Printing Office, Washington, DC 20402-9325, 1987.

[5] J.H. Walker, R. D. Saunders, and A.T. Hattenburg, "Spectral Radiance Calibrations," NBS Special Publication SP250-1, U. S. Government Printing Office, Washington, DC 20402-9325, 1987.

[6] R.L. Booker and D.A. McSparron, "Photometric Calibrations," NBS Special Publication SP250-15, U. S. Government Printing Office, Washington, DC 20402-9325, 1987.

[7] H.J. Kostkowski, "The National Measurement System for Radiometry and Photometry," NBSIR 75-939, National Bureau of Standards, Gaithersburg MD, 1977.

[8] The CORM report can be obtained from the CORM Secretary,

Dr. Arthur Springsteen
Labsphere, Inc.
P.O. Box 70
North Sutton, NH 03260-0070

[9] W.R. Waters, J.H. Walker, and A.T. Hattenburg, "Radiance Temperature Calibrations," NBS Special Publication SP250-7, U. S. Government Printing Office, Washington, DC 20402-9325, 1987.

[10] "Techniques for approximating the international temperature scale of 1990," BIPM, Pavillon de Brueteuil, F-92310, Sevres, France, 1990.

[11] "Le Systéme International d'Unités (SI),"6e Edition, BIPM, Pavillion de Breteuil, F-92310 Sévres, France.

[12] C.L. Cromer, G. Eppeldauer, J.E. Hardis, T.C. Larason, and A.C. Parr, "National Institute of Standards and Technology detector based photometric scale," Appl. Opt. **32**, 2936, 1993.

[13] Y. Ohno, "Realization of NIST Luminous Flux Scale using and Integrating Sphere with an External Source," CIE Publication 119, 23rd Session, New Delhi, 1995, Central Bureau of the CIE, Kegelstrasse 27, A-1030, Vienna, Austria, 1989;

a related paper is accepted for publication in J. IES 1996, see Ref. 40.

[14] See for example the following and references therein:

W.R. McCluney, "Introduction to Radiometry and Photometry," Artech House, Boston, 1994, ISBN 0-89006-678-7;

R.W. Boyd, "Radiometry and the Detection of Optical Radiation," John Wiley, New York, 1983, ISBN 0-471-86188-X;

C.L. Wyatt, "Radiometric Calibration: Theory and Methods," Academic Press, Orlando, 1978, ISBN 0-12-766150-6;

C.L. Wyatt, "Radiometric System Design," Macmillian Publishing Company, New York, 1987, ISBN 0-02-948800-1.

[15] F. Hengstberger, "Absolute Radiometry," Academic Press, Inc., Boston, 1989, ISBN 0-12-340810-5.

[16] W.W. Coblentz, "Various modifications of Bismuth-Silver thermopiles having a continuous absorbing surface," Bulletin of the Bureau of Standards **11**, 131, 1914, also issued as Scientific Papers of the Bureau of Standards #229, March 1914;

W.W. Coblentz, "Studies of Instruments for Measuring Radiant Energy in Absolute Value: An Absolute Thermopile," Bulletin of the Bureau of Standards **12**, 503, 1915, also issued as Scientific Papers of the Bureau of Standards #261, March 1916.

[17] W.W. Coblentz, "Present Status of the Determination of the Constant of Total Radiation from a Black Body," Bulletin of the Bureau of Standards **12**, 553, 1915, also issued as Scientific Papers of the Bureau of Standards #262, February 1916.

[18] The literature on silicon detectors is too extensive to review here as it is not the central theme of this Technical Note. The reader is referred to the following and the extensive references contained therein:

W. Budde, "Physical Detectors of Optical Radiation," Volume 4 of the Optical Radiation Measurement series, Academic Press, New York, 1983, ISBN 0-12-304904-0;

S. Middelhoek and S.A. Audet, "Silicon Sensors," Academic Press, London, 1989, ISBN 0-12-495051-5;

For a review of early NBS (NIST) efforts see,

J. Geist, M.A. Lind, A.R.Schaeffer, and E.F. Zalewski, "Spectral Radiometry: A new approach based upon electro-optics," NBS Technical Note 954, U.S. Government Printing Office, Washington, DC 20402-9325, 1977.

[19] D.C. Ginnings and M.L. Reilly, "Calorimetric measurement of thermodynamic temperatures above 0 ^{0}C using total blackbody radiation," Temperature; Its Measurement and Control in Science and Industry, Vol 4, Instrument Society of America, Pittsburgh, 1972.

[20] C.R. Yokley, "Long Wave Infrared Testing at NBS," SPIE Vol **416**–Applications of Optical Metrology–Techniques and Measurements II, 1983;.

C. R. Yokley, "A Radiometric Calibration Facility for Low Temperature Blackbodies," Final Report to the NASA Lyndon B. Johnson Space Center, contract T-9550C, November 23, 1976.

[21] T.J. Quinn and J.E. Martin, "A radiometric determination of the Stefan-Boltzmann constant and thermodynamic temperatures between - 408 ^{0}C and + 1008 ^{0}C," Phil. Trans. Roy. Soc. London, A**316,** 85, 1985.

[22] J.E. Martin, N.P. Fox and P.J. Keys, "A cryogenic radiometer of absolute radiometric measurements," Metrologia **21,** 147, 1985.

[23] The author knows of only two companies offering a commercial product, although other laboratories have developed cryogenic radiometers for their own use.

In the United States,

Cambridge Research and Instrumentation, Inc
21 Erie Street
Cambridge, MA 02139

In the United Kingdom,

Oxford Instruments, Ltd.
Eynsham
Oxford OX8 1TL
UK

[24] At the 1994 CCPR meeting in Paris approximately 10 nations indicated that they had purchased a cryogenic radiometer or were in the process of purchasing one and would use it as the basis of the radiometric measurements in their respective nations.

[25] T.R. Gentile, J.M. Houston. J.E. Hardis, C.L. Cromer, and A.C. Parr, "National Institute of Standards and Technology high-accuracy cryogenic radiometer," Appl. Opt. **35**, 1056, 1996.

[26] T.R. Gentile, J.M. Houston, and C.L. Cromer, "Realization of a scale of absolute spectral response using the NIST High Accuracy Cryogenic Radiometer," accepted by Applied Optics 1996.

[27] There is considerable literature on the quantum efficiency of silicon and a review of this topic is beyond the scope of this Technical Note. Some early NIST efforts in this regard are summarized in a paper by Zalewski and Geist titled, "Silicon photdiode absolute spectral response self-calibration," Appl. Opt. **19**, 1214, 1980;

See also a chapter by Geist titled, "Silicon Photodiode Self-Calibration," in Theory and Practice of Radiation Thermometry, edited by D.P. DeWitt and G.D. Nutter, Wiley-Interscience Publications, Inc., New York, 1988, ISBN 0-471-61018-6.

[28] G.H. Rieke, "Detection of light: from the ultraviolet to the submillimeter," Cambridge University Press, Cambridge, 1994, ISBN 0-521-41028-2.

[29] Private Communication, P. Boivin, NRC Ottawa.

[30] E.F. Zalewski, "The NBS Photodetector Spectral Response Transfer Program," NBS Special Publication 250-17, U.S. Government Printing Office, Washington, DC 20402-9325, 1988;

T.C. Larason, S.S. Bruce, and C.L. Cromer, "The NIST High Accuracy Scale For Absolute Spectral Response From 406nm to 920 nm," J. Res. Natl. Inst. Stand. Technol. **101**, 133, 1996.

L. Canfield, "Far Ultraviolet Detector Standards," NBS Special Publication 250-2, U.S. Government Printing Office, Washington DC, 20402-9325, 1987.

[31] Electrical standards are maintained in the Electronics and Electrical Engineering Laboratory at NIST.

[32] G. Eppeldauer and J.E. Hardis, "Fourteen-decade photocurrent measurements with large-area silicon photodiodes at room temperature," Appl. Opt. **30**, 3091, 1991.

G. Eppeldauer, "Temperature monitored/controlled silicon photodiodes for standardization," SPIE, **1479**, 71, 1991.

[33] A.R. Schaefer and K.L. Eckerle, "Spectrophotometric tests using a dye-laser-based radiometric characterization facility," Appl. Opt. **23**, 250, 1984;

A. R. Schaefer and R. D. Saunders, "Intercomparison between silicon and blackbody-based radiometry using a silicon photodiode/filter radiometer," Appl. Opt. **23**, 2234, 1984.

[34] CIE Publication No.15.2, "Colorimetry," Central Bureau of the CIE, Kegelstrasse 27, A-1030, Vienna, Austria, 1986.

[35] "The Science of Color," Committee on Colorimetry, Optical Society of America, Washington, DC, 1963.

[36] CIE Publication No. 69, "Methods of characterizing illuminance meters and luminance meters," Central Bureau of the CIE, Kegelstrasse 27, A-1030, Vienna, Austria, 1986.

[37] CIE Publication No. 84, "The measurement of luminous flux," Central Bureau of the CIE, Kegelstrasse 27, A-1030, Vienna, Austria, 1989.

[38] Y. Ohno, "New Method for Realizing a Total Luminous Flux Scale using an Integrating Sphere with an External Source," J. IES. **24,** 106, 1995.

[39] Y. Ohno, "Integrating Sphere Simulation-Application to Total Flux Scale Realization," Appl. Opt. **33**, 2637, 1994.

[40] Y. Ohno, "Realization of NIST 1995 Luminous Flux Scale using an Integrating Sphere Method," To appear in, J. IES. 1996.

[41] This document will be available in late 1996 as an update to NIST SP250-15 describing the NIST photometric calibration program.

[42] K.D. Mielenz, R.D. Saunders, and J.B. Shumaker, "Spectroradiometric determination of the freeing temperature of gold," J. Res. Natl. Inst. Stand. Technol. **95**, 49, 1990.

[43] B.C. Johnson, C.L. Cromer, R.D. Saunders, G. Eppeldauer, J. Fowler, V.I. Saprtisky, and G. Dezi, "A method of realizing the spectral irradiance based on an absolute cryogenic radiometer," Metrologia **30**, 309, 1993.

[44] B.K. Tsai, B.C. Johnson, R.D. Saunders and C.L. Cromer, "Comparison of filter radiometer spectral responsivity with the NIST spectral irradiance and illumnace scales," Metrologia **32**, 1, 1995.

[45] F.E. Nicodemus, "Self-Study Manual on Optical Radiation Measurements," NBS Tehcnical Note 910-1 through 910-8, U.S. Government Printing Office, Washington, DC 20402-9325. On a limited basis some of these documents are available from the Radiometric Physics Division, NIST, Gaithersburg, MD 20899-0001.

[46] R. Siegel and J.R. Howell, "Thermal Radiation Heat Transfer," Third Edition, Hemisphere Publishing Corp., Washington, 1992 ISBN 0-89116-271-2.

[47] J. B. Fowler and G. Dezsi, "High Accuracy Measurement of Aperture Area Relative to a Standard Known Aperture," J. Res. Natl. Inst. Stand. Technol. **100**, 277, 1995.

[48] D.P. DeWitt and G.D. Nutter, "Theory and Practice of Radiation Thermometry," John Wiley and Sons, New York, 1988, ISBN 0-471-61018-6.

[49] Private Communication, R.D. Saunders. The Special Publications, SP250-1 and SP250-20 (Refs. 4 and 5), are being rewritten and will feature a complete uncertainty discussion for the determinations indicated here.

NIST Technical Publications

Periodical

Journal of Research of the National Institute of Standards and Technology—Reports NIST research and development in those disciplines of the physical and engineering sciences in which the Institute is active. These include physics, chemistry, engineering, mathematics, and computer sciences. Papers cover a broad range of subjects, with major emphasis on measurement methodology and the basic technology underlying standardization. Also included from time to time are survey articles on topics closely related to the Institute's technical and scientific programs. Issued six times a year.

Nonperiodicals

Monographs—Major contributions to the technical literature on various subjects related to the Institute's scientific and technical activities.

Handbooks—Recommended codes of engineering and industrial practice (including safety codes) developed in cooperation with interested industries, professional organizations, and regulatory bodies.

Special Publications—Include proceedings of conferences sponsored by NIST, NIST annual reports, and other special publications appropriate to this grouping such as wall charts, pocket cards, and bibliographies.

National Standard Reference Data Series—Provides quantitative data on the physical and chemical properties of materials, compiled from the world's literature and critically evaluated. Developed under a worldwide program coordinated by NIST under the authority of the National Standard Data Act (Public Law 90-396). NOTE: The Journal of Physical and Chemical Reference Data (JPCRD) is published bimonthly for NIST by the American Chemical Society (ACS) and the American Institute of Physics (AIP). Subscriptions, reprints, and supplements are available from ACS, 1155 Sixteenth St., NW, Washington, DC 20056.

Building Science Series—Disseminates technical information developed at the Institute on building materials, components, systems, and whole structures. The series presents research results, test methods, and performance criteria related to the structural and environmental functions and the durability and safety characteristics of building elements and systems.

Technical Notes—Studies or reports which are complete in themselves but restrictive in their treatment of a subject. Analogous to monographs but not so comprehensive in scope or definitive in treatment of the subject area. Often serve as a vehicle for final reports of work performed at NIST under the sponsorship of other government agencies.

Voluntary Product Standards—Developed under procedures published by the Department of Commerce in Part 10, Title 15, of the Code of Federal Regulations. The standards establish nationally recognized requirements for products, and provide all concerned interests with a basis for common understanding of the characteristics of the products. NIST administers this program in support of the efforts of private-sector standardizing organizations.

Order the **following** *NIST publications—FIPS and NISTIRs—from the National Technical Information Service, Springfield, VA 22161.*

Federal Information Processing Standards Publications (FIPS PUB)—Publications in this series collectively constitute the Federal Information Processing Standards Register. The Register serves as the official source of information in the Federal Government regarding standards issued by NIST pursuant to the Federal Property and Administrative Services Act of 1949 as amended, Public Law 89-306 (79 Stat. 1127), and as implemented by Executive Order 11717 (38 FR 12315, dated May 11, 1973) and Part 6 of Title 15 CFR (Code of Federal Regulations).

NIST Interagency Reports (NISTIR)—A special series of interim or final reports on work performed by NIST for outside sponsors (both government and nongovernment). In general, initial distribution is handled by the sponsor; public distribution is by the National Technical Information Service, Springfield, VA 22161, in paper copy or microfiche form.