ELSEVIER

Infrared Physics & Technology 43 (2002) 389–396

INFRARED PHYSICS & TECHNOLOGY

www.elsevier.com/locate/infrared

Silicon as a standard material for infrared reflectance and transmittance from 2 to 5 μm

Simon G. Kaplan *, Leonard M. Hanssen

Optical Technology Division, NIST, Gaithersburg, MD 20899-8441, USA

Received 16 January 2001

Abstract

We have investigated the specular reflectance and transmittance of polished, high-resistivity single-crystal Si in the spectral range from 2 to 5 μm. Measurements were performed with a nearly collimated (≈0.7° divergence) beam at angles of incidence from 12° to 80°, and a spectral resolution of 16 cm^{-1}. The measured values agree with the expected values obtained from the published index of refraction of Si to within 0.002. This represents a substantial reduction in experimental uncertainty compared to previous results and demonstrates the usefulness of Si as a standard material for infrared reflectance and transmittance.
Published by Elsevier Science B.V.

PACS: 78.30.Am

Keywords: Reflectance; Transmittance; Infrared; Polarization; Index of refraction

1. Introduction

Accurate measurements of the regular reflectance and transmittance of materials in the infrared as a function of incident angle and polarization are important both in the calibration of spectroradiometric instrumentation and the determination of optical constants [1,2]. Such measurements are typically performed using either grating-monochromator or Fourier-transform infrared (FT-IR) spectrophotometers along with commercially available sampling accessories [3]. These accessories are usually not very mechanically precise, and require the user to make fine adjustments to the alignment without reliable reference points, as would be provided by optical shaft encoders or laser/quadrant-detector systems. In addition, most variable-angle reflectance accessories require the use of a reference mirror (typically Au) whose reflectance values must then be known (or assumed to follow handbook values). The polarizers used in these accessories are typically wire grids on ZnSe or KRS-5 substrates, and may have extinction ratios >0.03 at short wavelengths (<2 μm).

The difficulties associated with making accurate measurements with these devices are compounded by errors inherent to the spectrophotometers

* Corresponding author. Tel.: +1-301-975-2336; fax: +1-301-840-8551.
E-mail address: simon.kaplan@nist.gov (S.G. Kaplan).

1350-4495/02/$ - see front matter Published by Elsevier Science B.V.
PII: S1350-4495(02)00161-5

themselves. In the case of FT-IR spectrophotometers, ordinate errors due to non-linearity, inter-reflections, ambient thermal emission, and imperfect phase correction can be quite large. The photoconductive HgCdTe detectors often used with these systems are usually small (<1 mm diameter) and not spatially uniform. Thus the measurements are more sensitive to misalignment of the sampling optics than would be the case with visible-near infrared instruments using large-area uniform Si or InGaAs detectors. Transmittance measurements, while not as sensitive to the alignment of the sample, are still subject to errors in the spectrophotometer, as well as beam-shifting effects, which can be large for samples with appreciable optical thickness [4].

Standard materials such as crystalline Si or Ge, whose indices of refraction are well known throughout the spectral region from 2 to 25 μm, could be useful as both diagnostic samples to test the accuracy of a measurement system, and reference standards for comparative measurements. Over this spectral range, the indices of refraction, n, of Si and Ge are known with uncertainties of <0.002. Thus the angle and polarization-dependent transmittance and reflectance in the transparent spectral regions can be calculated from the Fresnel equations with <0.001 uncertainty, for samples of sufficient purity and optical quality. In addition, wedged samples can be used in some circumstances to make single-surface reflectance standards which are useful as well in the weakly absorbing spectral regions, where the imaginary part of the complex refractive index $k \ll n$. Typically k is quite sensitive to impurity content, limiting the usefulness of these materials as transmittance standards to the transparent spectral regions.

A previous study examined Si and Ge samples in the 2–25 μm spectral region and found agreement with the predicted values within ±0.02 [5]. The agreement between the predicted and measured values was found to be worst at large angles of incidence, where the measurement is more sensitive to imperfect polarization and angular distribution of flux in the incident beam. In this study, we re-examine Si in the transparent spectral region from 2 to 5 μm with a precision goniometric system using a nearly collimated beam (≈0.7° divergence) and a high-quality Ge reflective Brewster-angle polarizer. The system, whose basic layout has been described previously [6], is currently configured with an InSb detector which allows spectral reflectance measurements in the 1–5.2 μm wavelength region. With this system we are able to make measurements with an uncertainty of ±0.002 (coverage factor = 2) over most of this spectral region.

We have measured the s- and p-polarized transmittance and reflectance of a high-purity single-crystal Si sample with a diameter of 75 mm and a thickness of 0.5 mm at angles of incidence ranging from 12° to 80°. The Si sample had a resistivity of greater than 30,000 Ω-cm and an impurity level of approximately 10^{13} cm^{-3}. It was polished to standard integrated circuit specifications, which yielded an rms surface roughness of approximately 1 nm. No special treatment of the surface was performed, so the sample is assumed to have the native oxide layer in place. The results are compared to the Fresnel equation predictions using handbook values for the index of refraction of Si. We find agreement within the experimental uncertainty, demonstrating that high-quality crystalline Si can be useful as a reference standard for angle and polarization dependent IR measurements.

2. Experimental details

A diagram of the optical layout of the goniometer system (similar to Ref. [6]) is shown in Fig. 1. The 50 mm diameter collimated output beam from a Bio-Rad FTS-60A spectrometer [1] is collected by a 90° off-axis paraboloidal (OAP) mirror and focussed ($f/4$) onto a variable aperture wheel. The diverging beam from the aperture is then collected by a second 90° OAP, which is positioned to reflect a slowly converging beam into the rest of

[1] The mention of certain trade names in this manuscript is for informational purposes only and not meant to imply an endorsement by the National Institute of Standards and Technology that the equipment mentioned is necessarily the best suited for the task.

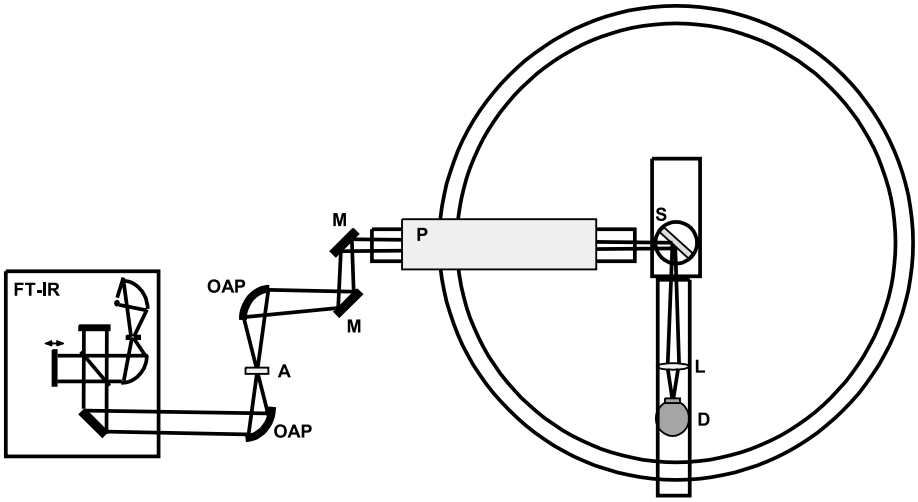

Fig. 1. Optical layout of the goniometric transmittance/reflectance system using an FT-IR source. OAP, off-axis paraboloidal mirror; A, variable aperture wheel; M, folding mirror; P, reflective Brewster-angle polarizer; S, sample mounted on rotation/translation stage; L, CaF_2 lens and D, 77 K InSb detector mounted on rotating ring drive. The entire optical system is enclosed in a sealed box and purged with dry, CO_2-free air.

the system. Two flat steering mirrors are used to align the beam to the rotation axis of the goniometer and normal to the sample surface. An opaque semi-circular block is placed in the beam following the second OAP in order to remove inter-reflections between the FT-IR and other components in the system, and the beam waist is reduced with an additional aperture, yielding a $\approx f/30$–$f/50$ geometry at the sample position.

The input beam in the goniometer is polarized using a reflective Brewster-angle polarizer consisting of four Ge plates. The polarizer design has been discussed elsewhere [7]. This device has a clear aperture of 37 mm. The four plates are aligned so that the output beam undergoes less than 0.2 m rad of deviation, allowing the polarizer to be rotated without seriously disturbing the optical alignment of the goniometer system. The extinction coefficient is less than 10^{-5} over most of the wavelength region from 1 to 5.2 μm. The polarizer thus allows selection of the polarization state of the incident beam with negligible leakage of the unwanted mode. Alignment of the polar axis of the polarizer with respect to the rotation axis of the goniometer was accomplished by minimizing the signal near Brewster's angle with a Si sample in place.

Initial alignment of the goniometer system was performed using a visible output beam from the FT-IR spectrometer. After aligning the beam to pass through the axis of rotation of the goniometer, we aligned the sample on the same axis and adjusted its tilt to retro-reflect the incident beam within ±0.2°.

Finer adjustment of the incident angle and sample positioning required rotating the sample to different angles and observing the reflected spot at the detector position. The detector stage position is controlled with a stepper motor and gear combination that yields a minimum step size of 0.01°. The detector must be precisely positioned at an azimuthal angle of 2θ when the incident angle on the sample is θ. This is accomplished by aligning a Si diode quad-detector with the beam of a diode laser mounted on the sample rotation stage when the incident beam is centered on the infrared detector, then rotating both the sample and detector stages to 2θ, and tweaking the position of the detector stage to minimize the quad-detector signal. The quad-detector yields an angular sensitivity of <0.001°. The detector stage position is thus tied to the sample stage position. Small angular adjustments (0.01–0.02°) and horizontal translations (0.1–0.2 mm) of the sample were made to align the

reflected beam at the sample position at several different incident angles and minimize the average deviation from the straight-through position. The alignment uncertainty is $\approx 0.05°$ and is limited somewhat by non-linearity in the sample rotation stage, which must move accurately from 2θ to θ during the alignment procedure.

The alignment of the system was completed and the source was switched from a tungsten–halogen bulb to a ceramic-coated globar, while the quartz beamsplitter was replaced with a KBr:Ge beamsplitter for the infrared measurements. A photoconductive liquid-nitrogen-cooled InSb detector with responsivity variation of $<1\%$ over an active diameter of 3.5 mm provided spectral coverage from 1.6 to 5.2 μm with this source and beamsplitter combination. A CaF_2 lens was used to focus the beam onto the detector with an approximately 1 mm spot size. The detector was tilted to prevent reflected light from returning to the sample or interferometer.

Spectra were acquired for transmittance and reflectance at several incident angles ranging from 12° to 80°, with a spectral resolution of 16 cm^{-1}. The measurements were found to be repeatable to within 0.1% of the measured transmittance or reflectance values, with most of the statistical variation coming from drift in the FT-IR signal level. Straight-through reference measurements were repeated periodically to verify the system stability. Because of obscuration from the sample holder, it was necessary to measure the transmittance at angles greater than 45° on the opposite side of the sample normal from the reflectance measurements. Asymmetry in the flux distribution of the focussed beam leads to a difference between the effective angles of incidence on either side of the sample normal of approximately 0.26°. A compensating offset was made in the incident angle by measuring the transmittance at $\pm\theta$ for several values of θ and symmetrizing the results.

3. Results and discussion

Fig. 2 shows the measured reflectance and transmittance values of the Si sample from 2 to 5 μm wavelength for both s- and p-polarized incident light. In each frame the measurement results for each angle (symbols) are compared with the predicted values (curves) based on tabulated values for the index of refraction of Si [8]. The transmittance and reflectance are calculated assuming incoherent addition of the multiply reflected beams within the material, which is a good approximation for low-resolution data such as this. Over this spectral region the absorption coefficient of pure Si is less than 5×10^{-3} cm^{-1}, so the predicted absorptance for the 0.5 mm thick sample is small compared to the uncertainty in the measurement results.

In order to assess the accuracy of the transmittance and reflectance data displayed in Fig. 2, we assume that the published values for the Si index of refraction have an uncertainty of less than 0.002, so that any errors in the predicted values are less than 0.0003, and thus less than the repeatability component of the uncertainty in the reflectance and transmittance data. Any differences between the data and the predicted values therefore result from either errors in the measurement or extrinsic effects in the sample, such as an adsorbate layer or bulk impurities.

In these angular-dependent measurements, we can separate sources of systematic error into two categories. First are common sources of radiometric error in FT-IR measurements, such as interreflections, non-linearity in detector response, background thermal emittance, and optical non-equivalence between the sample and reference configurations [9,10]. For the absolute reflectance data, the most troublesome effect is the slight shift and distortion of the irradiation pattern on the detector due to misalignment of the sample and detector stages at the various angles, compared to the straight-through configuration. The non-uniform source image on the detector is also flipped about a vertical axis between the sample and reference measurements. In combination with spatial non-uniformity in the detector responsivity, these effects lead to wavelength-dependent errors in the measured reflectance which depend in detail on the nature of the detector non-uniformity.

Errors in the measured reflectance also result from mismeasurement of the incident angle, or an asymmetric distribution of flux versus angle, pro-

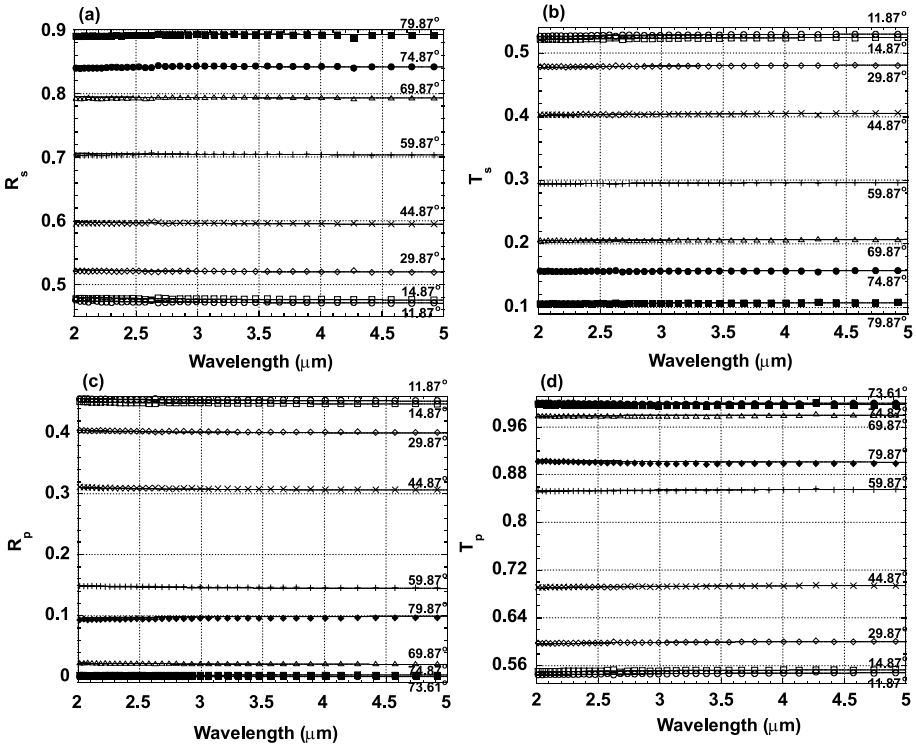

Fig. 2. Reflectance and transmittance versus wavelength of a 0.5 mm thick Si sample at various angles of incidence for s- and p-polarized incident light; (a) R_s, (b) T_s, (c) R_p, and (d) T_p. In each plot the symbols are the measured data and the curves are the values calculated from the index of refraction as described in the text.

ducing a result which represents an average reflectance with an unknown weighting function. The effects of uncertainty in the effective angle of incidence become more pronounced at larger angles, where the reflectance and transmittance are more strongly dependent on angle. One way of distinguishing between the two classes of error is to examine the apparent absorptance $A = 1 - T - R$ in the non-absorbing spectral region. Because the transmittance and reflectance are measured in nominally identical geometries, their sum should be 1 even though the effective angle of incidence may not be known with the same relative uncertainty.

The data from Fig. 2 is combined and re-displayed in Fig. 3 as absorptance on an expanded scale (there are two gaps in the data near 2.7 and 4.2 μm where spurious structure from atmospheric absorption has been removed). The s-polarized data in Fig. 3(a) shows less than 0.0005 apparent absorptance from 2.8 to 5.2 μm for $\theta < 45°$. At shorter wavelengths, there is a pronounced increase in apparent absorptance at angles larger than 45°, up to 0.004 at 2.0 μm and 80° incidence. The structure appears only in the reflectance data and not the transmittance data, indicating that it is due to a radiometric error and not true absorptance in the Si sample.

In Fig. 3(b), the p-polarized data shows less than 0.002 combined error up to 75° for the whole wavelength region. At larger angles, the error increases up to 0.005. In addition, there is an apparently real absorption feature due to adsorbed hydrocarbon centered near 3.3 μm, which grows with increasing angle. At 80° incidence, the reflectance and transmittance are very steep functions

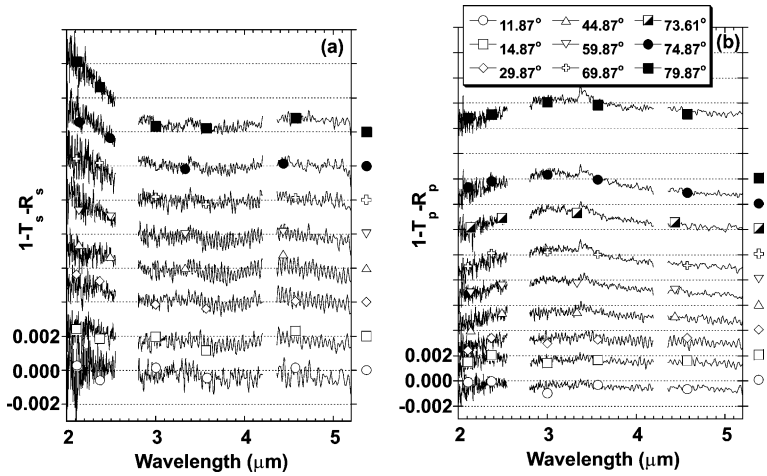

Fig. 3. Apparent absorptance signals $1 - T - R$ versus wavelength at various angles of incidence for (a) s-polarized and (b) p-polarized measurements of the Si transmittance and reflectance. In each frame successive curves have been offset by 0.002 for distinguishability. For both polarizations, at angles less than 45° the error appears to be less than ±0.001 over most of the spectral region, with larger errors seen at small wavelength in (a) and larger angles in (b). Spurious structure from atmospheric absorption near 2.7 and 4.2 μm has been removed from this figure and from Fig. 4 as well.

of angle, so that a difference of only 0.015° between the effective angles of incidence for T and R could produce the apparent 0.005 absorptance level.

Fig. 4 shows the differences between the measured and calculated reflectance values in Fig. 2. Most of these plots show the measured values varying both above and below the expected ones as a function of wavelength, with no clear systematic bias towards higher or lower values that would indicate an angular error. The exception is the p-polarized reflectance data shown in Fig. 4(c) which shows systematically ≈0.001 too high results up to 70° incidence, then becoming systematically too low at larger angles (beyond Brewster's angle). This would seem to indicate that the effective angle of incidence is larger than the nominal value. However, the transmittance data in Fig. 4(d) does not follow this trend. The effective angle of incidence for reflectance and transmittance may vary slightly due the distortion of the beam by the polarizer plates, which are slightly curved from the polishing process and impart a small ellipticity to the spot on the sample which depends upon the polarizer angle.

4. Conclusions

We have measured the angle and polarization dependent reflectance and transmittance of a 0.5 mm thick high-purity Si sample, and compared the results with the expected values based on handbook values for the index of refraction of Si in the transparent spectral region. The magnitude of the differences between the calculated and measured values is less than 0.002 over most of the spectral region, confirming a significant reduction in measurement uncertainty compared to previous studies. The improvement over previous results [5] obtained with a modified commercial reflectance accessory designed to fit the $f/3$ beam of the FTIR sample compartment is attributed to more precise alignment, a nearly collimated beam, a high-quality polarizer, and a large-area uniform detector. The errors in the previous measurements were largest at short wavelength, where the wire grid polarizer extinction ratio rises sharply, and at large angle, where the difference between s- and p-polarized transmittance and reflectance is large and a small leakage of the wrong polarization mode causes a large error. In addition, the response

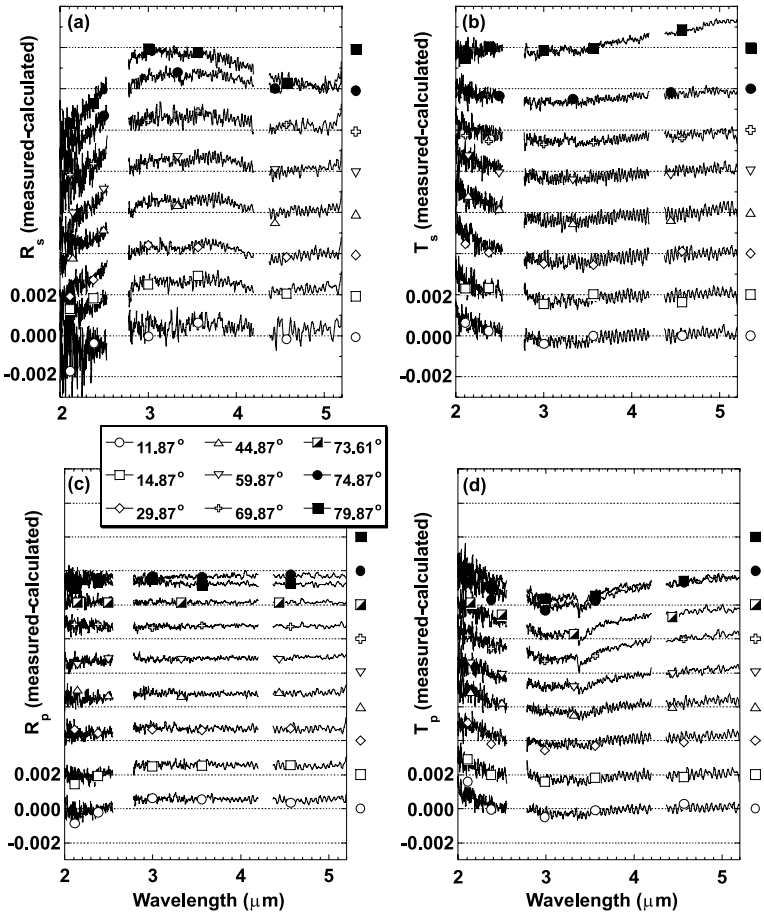

Fig. 4. Differences between the measured and calculated T and R values for the the Si sample with both s- and p-polarized incident light, at various angles of incidence: (a) R_s, (b) T_s, (c) R_p, and (d) T_p. In each frame, successive plots have been offset by 0.002.

is very steeply angle-dependent at large angles, making the correction for beam divergence more difficult. Both of these problems are resolved in the goniometer system.

High-purity Si is a good material to use as a reflectance or transmittance standard in the 2–5 μm wavelength region. Extension to longer wavelengths as a reflectance standard should be possible by using wedged Si to avoid back-surface reflected light which can be absorbed in the material. Further studies of this configuration and other transparent infrared materials such as Ge and ZnSe are planned. Such standards have the advantage of being tied to high-accuracy index of refraction measurements and should be more reproducible and stable than thin-film Au, Ag, or Al reference mirrors.

References

[1] F. Wooten, Optical Properties of Solids, Academic Press, New York, 1972, pp. 1–172.

[2] F.J.J. Clarke, Infrared reflectance standards from NPL, in: Developments in Optical Component Coatings, SPIE Vol. 2776 (1996) pp. 184–195.

[3] J.A. Palmer, The measurement of transmission, absorption, emission, and reflection, in: M. Bass (Ed.), Handbook of Optics, Vol. 2, McGraw-Hill, New York, 1995, p. 25.11.

[4] L. Hanssen, S. Kaplan, Methods for absolute reflectance measurement of transmissive materials in the infrared, Proc. SPIE 3425 (1998) 16–27.
[5] Z.M. Zhang, L.M. Hanssen, R.U. Datla, Polarization-dependent angular reflectance of silicon and germanium in the infrared, Infr. Phys. Techno. (1995).
[6] S.G. Kaplan, L.M. Hanssen, Angle-dependent absolute infrared reflectance and transmittance measurements, Proc. SPIE 4103 (2000) 75–84.
[7] D.J. Dummer, S.G. Kaplan, L.M. Hanssen, A.S. Pine, Y. Zong, High-quality Brewster's angle polarizer for broadband infrared application, Appl. Opt. 37 (1998) 1194.
[8] E.D. Palik, Handbook of Optical Constants of Solids, Academic, Orlando, FL, 1985, p. 566.
[9] J.R. Birch, F.J.J. Clarke, Fifty categories of ordinate error in Fourier transform spectroscopy, Spectrosc. Europe 7 (1995) 16–22.
[10] S.G. Kaplan, L.M. Hanssen, R.U. Datla, Testing the radiometric accuracy of Fourier transform infrared transmittance measurements, Appl. Opt. 36 (1997) 8896.