533

Versatile scan generator and data collector for scanning tunneling microscopes

R. D. Cutkosky

Electron and Optical Physics Division, National Institute of Standards and Technology, Gaithersburg, Maryland 20899

(Received 20 July 1989; accepted for publication 9 November 1989)

An instrument has been constructed for generating the complex scanning and data-collection sequences required for scanning tunneling microscopy. The instrument is controlled by and returns data to a laboratory computer over an IEEE 488-bus. A very high data-collection speed was achieved through the use of a digital signal-processing microprocessor coupled to a 16-bit I/O processor.

INTRODUCTION

The first STM constructed by the Electron Physics Group at NIST was similar to an IBM Zurich microscope.[1] It made use of a set of commercial programmable power supplies controlled via an IEEE 488-bus connection for scan generation. An analog-to-digital converter on a card which plugged into the backplane of the laboratory computer formed the data-collection part of the system.

While this arrangement proved to be very flexible, it was limited to relatively low data rates. We considered adopting a substantially hard-wired system, but rejected this approach because of our need to frequently modify the measurement algorithm. Finally, we settled on a special purpose system that was explicitly designed to execute the program at a very high rate. This has provided us with both speed and flexibility.

The new integrated instrument provides a simple and convenient way of producing the complex scanning sequences and control patterns required for obtaining spectroscopic data together with the normal topographic image from an STM. The new instrument communicates with the laboratory computer through an IEEE 488-bus connection, which can in principle provide data transfers at rates up to 10^6 bytes per second. Since the laboratory computer must collect and store the data, in addition to displaying a real-time topographic image, a very fast laboratory computer is required.

Two identical instruments have been built. They occupy $3\frac{1}{2}$ in. of a 19-in. rack and have no front panel controls other than an on-off switch. They yield outputs in the range of $\pm$ 10 V. External high-voltage amplifiers are used to drive the piezoelectric transducers in the microscope. The servo system for maintaining the z position of the tunneling tip is also external.

Space limitations make it impossible for this article to provide more than a general description of the instrument and the motivation behind some of its principle features. It is hoped that this will provide ideas and encouragement to others involved with STM instrumentation. The details of the programs that control the two embedded microprocessors are certainly critical to the success of the instrument, but it is also true that many other formulations would work equally well. Anyone thinking of exactly duplicating this instrument may contact the author.

I. FEATURES AND SPECIFICATIONS

STM scan drives[2] usually provide an x-y raster pattern that controls discrete x and y piezoelements or the corresponding sectors of a tube scanner.[3] The z piezoelement is controlled by a servo system that endeavors to keep the tunneling current fixed for a fixed applied tunneling bias voltage. Measurements of the variations in the output of the servo as a function of x and y are interpreted as the surface topography.

For high-resolution topography measurements, it is useful to use the full range of the z-servo output measurement system. Usually, most of this dynamic range must be devoted to measuring the tilt of the sample surface relative to the nominal scan plane of the x and y piezoelements. Further, the z position of the sample surface may be slowly drifting away from (or toward) the tip because of long-term thermal effects, and dynamic range in the z measurement must be allocated to prevent saturation.

We chose an approach in which the tilt and drift are compensated for and therefore are not included in the z-servo measurement. Our typical measurement protocol begins with single scans in the x and y directions. From these, a surface normal can be calculated. Further, by measuring the rate of change of the z servo when the tip is stationary, the rate of z drift can be determined. Our scanner scans a raster pattern in x, y, and z, which moves the tip on a flat surface a fixed distance above the tilted sample surface. The z scan position is a function of x, y, and time so that a linear z drift is completely removed. The z servo and the associated measurement circuitry need to measure only the deviations of the real surface from the flat virtual scan surface.

The 16-bit x, y, and z DACs (digital-to-analog converters) of the instrument can be programmed to generate raster scan patterns covering a parallelogram at an arbitrary angle in three-dimensional space. The input data, provided by the lab computer to specify the raster pattern, consist of two vectors, one describing the first line of the scan, and the other describing a line from the start of the first line to the start of the last line. The number of scan lines and the number of points per line are also specified. The scanning pattern can be chosen to be a conventional TV-style raster scan, with data collected in one direction only, or a bidirectional scan, with data collected in both directions.

At a set of uniformly spaced measurement points along

each scan line, the instrument measures the voltage at the first of three analog inputs, which in practice monitors the voltage on the z piezo. This 14-bit integer value is returned to the lab computer. After each of these measurements, the instrument may, at each point, at a selectable subset of these points, or in response to a real-time trigger from the lab computer, conduct a series of voltage scans of the tunneling probe to obtain spectroscopic data at the point. Programmed voltage scans of the tunneling probe are performed through manipulations of the e DAC, which controls the STM tunneling bias voltage. These programmed sequences will be referred to as e scans in the sequel. Before every e scan, a TTL output is produced which can be used to disable the z servo, so that changing the tunneling bias voltage does not change the tunneling gap. Finally, so long as "special" e scanning has not been selected, it is possible to repeat each line of the raster pattern up to 12 times, with the e DAC set at a new value from a 12-entry table for each pass. These values are in place with the servo enabled and allowed to settle; they therefore directly affect the tunneling gap.

e scans are of two types. "Standard" e scans begin by setting the e DAC to a selected value, and then stepping the e DAC in uniform steps to a final value, after which the process is repeated in reverse order, ending with the e DAC at its original value. At the end of the e scan, the z servo is restored. If desired, the z DAC may be made to change in proportion to the e DAC, with proportionality constants which may be different for positive and negative e-DAC values. This is intended to provide the capability of reducing the tunneling gap when the tunneling voltage is small, so that the tunneling current can be measured with better precision. After each step is taken, the instrument measures the voltages at any combination of the three analog inputs and sends the values to the lab computer. Usually, the tunneling current is monitored by one of the analog inputs. Optionally, the "standard" e-scan sequence may be repeated a number of times at each point. The duplicated measurements may be averaged before transmission to the laboratory computer if desired.

"Special" e-scans begin by setting the first of up to 12 values from a 12-entry table into the z DAC, and then incrementing the e DAC in uniform steps, N times, beginning at zero. The number of steps, N, is programmable. The e DAC is then decremented $2N$ times and finally incremented N times to return to zero. After each step is taken, the instrument measures the voltages at any combination of the three analog inputs, and sends the values to the lab computer. In addition, if input 2 reaches saturation while the absolute value of the e-DAC voltage is increasing, then no further change in the e DAC is made until a step is reached that should no longer cause saturation. Thus, if input 2 is used to monitor the tunneling current, a means of avoiding excessive and possibly damaging tunneling currents is provided. After the scanning sequence described above, the next table value is set into the z DAC, and the process is repeated up to the maximum of 12 times.

A feature that was added to the instrument at the end of its development provides the ability to precede every e-scan sequence with a routine that signals a quad counter in an external NIM bin to count for a programmable interval, after which the contents of the four 24-bit counters are read and returned to the lab computer. This feature is intended for use in connection with spin polarization studies.

In order to counteract small drifts in tunneling gap separation caused by slow temperature changes or relaxation, the output of an 18-bit DAC driven by a programmable counter is summed with the z output. This counter is controlled directly through the I/O processor.

II. INITIALIZATION AND SCAN GENERATION

The instrument (see Fig. 1) achieves its high speed through the use of a specialized digital signal-processing chip (DSP), a Texas Instruments type TMS 32010.[4] It is controlled by, and returns data to, an Intel 80186 used as an I/O processor, which also handles the 488-bus controller that communicates with the lab computer. When power is turned on, the I/O processor executes a program in ROM (read only memory) that first initializes itself, and then transfers (downloads) a block of code to a faster random access program memory (RAM) for use by the DSP. Following this transfer, the RAM is disconnected from the I/O processor bus and connected to the DSP, and the DSP is started. The I/O processor then transfers a default data block from ROM to the DSP on-chip data memory through a 16-bit latch in conjunction with handshaking signals returned through a 64-deep, 16-bit FIFO (first-in, first-out data storage stack). Under start-up conditions, all of the DACs shown in Fig. 1 are set to give 0 output, no scanning is underway, and no data transfer is taking place.

The instrument is operated from the lab computer by directly accessing five 12-bit DACs to set the nominal voltages at the five analog outputs labeled I, E, X, Y, and Z. These represent starting positions for the voltages that are swept by the DSP during a raster scan and set the center of the rectangular plane that is produced by the scanning process. The 12-bit DACs are used to position the tunneling probe in relatively course steps, but more finely than can be done with the sample positioner. Certain other attributes of the data-collection process, for example, those dealing with the treatment of 488-bus EOI messages, and the rate at which the 12-bit DACs are changed, are also set through direct communication with the I/O processor. For example, sending the string "W10" causes any future update of the 12-bit DACs to be performed as a linear ramp over a period of 10 s, and sending "X200" causes the 12-bit x DAC to be updated to the value 200.

The parameters of the scanning process are passed on through the I/O processor to the DSP processor through the data latch and handshake process mentioned above. These parameters are stored in dedicated locations of the DSP internal data RAM and are easily accessed from the lab computer. For example, the three-dimensional vector describing the first line of a scan is stored in locations 30, 31, and 32 of the RAM. To set the x, y, and z components of this vector to 200, 300, and 400, the lab computer sends the data string "D30,3,200,300,400" to the I/O processor over the 488-bus. Other locations contain repeat counts, integrating times, delay times, and operating conditions to be used during a scan.

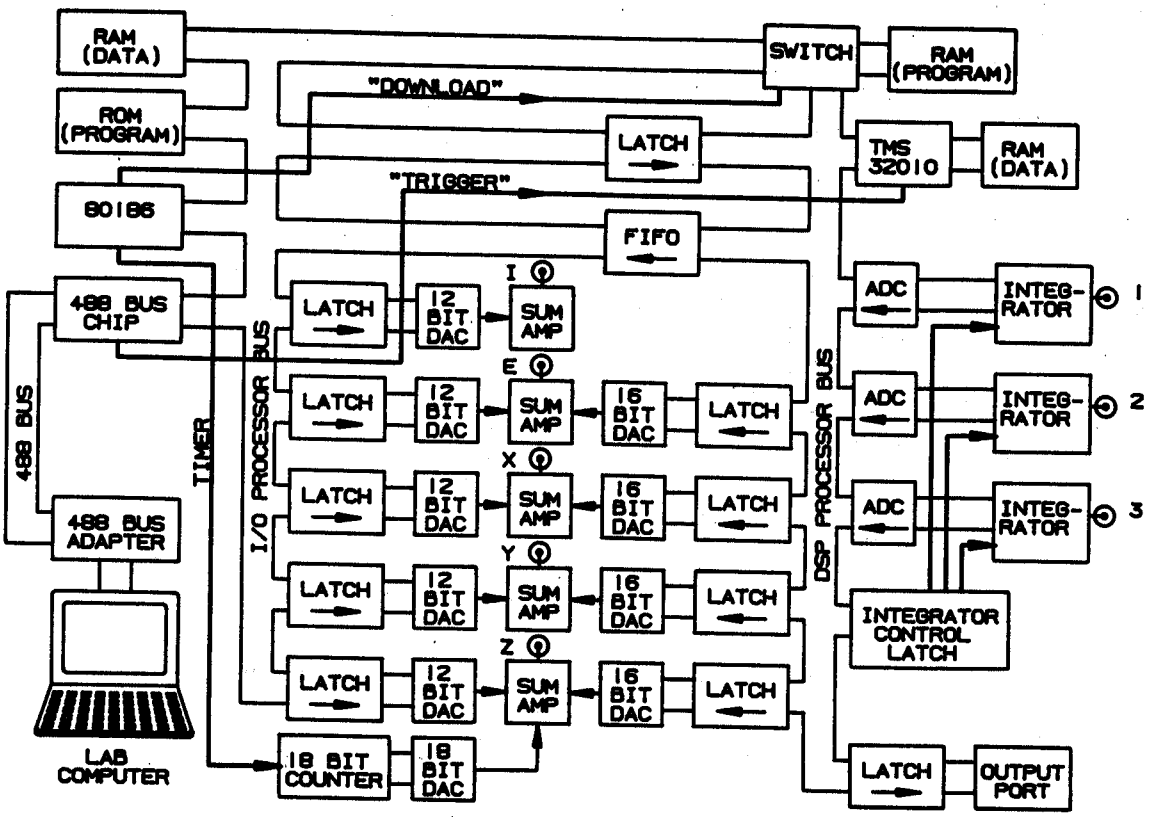

FIG. 1. A complete block diagram of the scan generator and data-collector system.

After the scanning parameters are set up, a raster scan is initiated by sending the string "*Gn*" from the lab computer, where *n* is an integer which specifies the type of scan and the number of ADCs to be read during *e* scans. The "*G*" command is passed on to the DSP, which begins the scanning process by moving the 16-bit *x*, *y*, and *z* DACs to the starting corner of the raster, at the specified rate. The successive lines are then scanned, with the indicated measurements and *e* scans performed as required. The measurements, interspersed with measurement type identifiers, are written to the input of the FIFO. Meanwhile, the I/O processor reads the FIFO, whenever it contains data, and transfers the 16-bit words to the lab computer in 8-bit bytes. The flexible depth of the FIFO helps to avoid data loss caused by momentary delays in the communication process. At the end of a raster scan, the *x*, *y*, and *z* DACs are returned to their starting positions, and an "end of transmission" message is sent to the lab computer. Another identical scan can be initiated by sending another "*G*" command.

III. ANALOG-TO-DIGITAL CONVERSION

The three analog-to-digital converters in the scanner are connected according to Fig. 2. An input buffer drives a selectable resistor at the input of an integrator connected to the ADC. The measurement process consists of opening the short that is initially across the integrating capacitor and connecting one of the resistors for a programmable length of time. The resistor is then disconnected, and the ADC is triggered and read. This technique gives considerable flexibility in gain selection through the choice of the integration time and the range resistor, and gives a true average of the input voltage over the integration period.

Figure 2 uses CMOS analog switches having series resistances of about 75 Ω. The resistors were trimmed to compensate for the switch resistances, and the capacitors are selected for low loss and small voltage dependence, yielding a measurement system that realizes the full accuracy of the 14-bit analog-to-digital converters.

The ADCs were constructed on a two-layer board and are enclosed in a mu-metal box. They convert to 14-bit accuracy in about 8 μs, not counting the integration time.

IV. DIGITAL-TO-ANALOG CONVERSION

The DACs and their associated latches and summing amplifiers were constructed on a four-layer printed circuit board that very effectively removes microprocessor noise

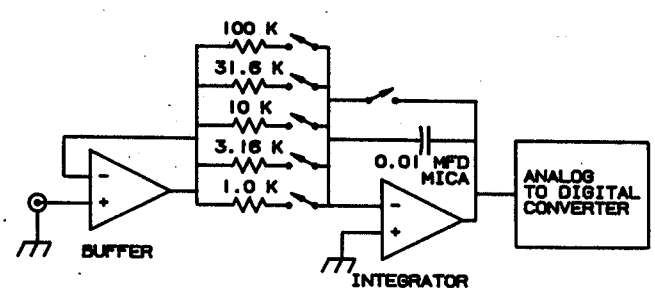

FIG. 2. Analog input circuitry, showing the integrator and analog-to-digital converter.

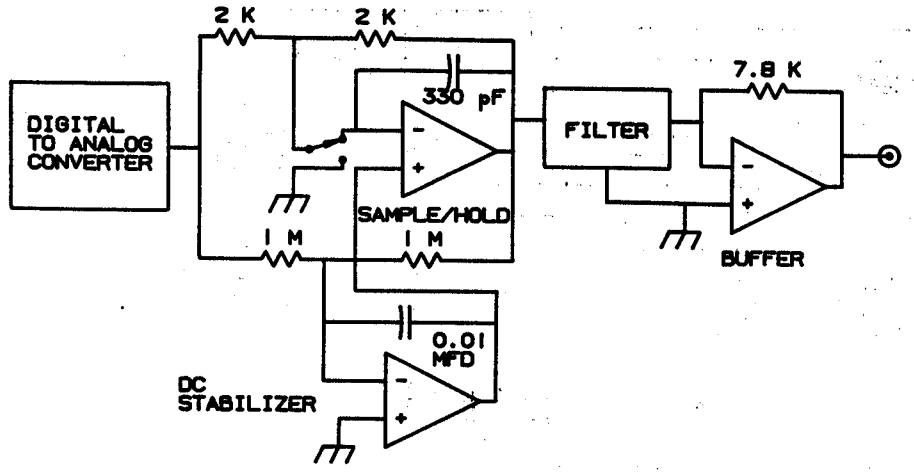

FIG. 3. Analog output circuitry, showing the digital-to-analog converter and deglitcher.

from the outputs. Immunity from other interference sources, particularly those at 60 Hz, was accomplished by enclosing the board in a mu-metal box. The measured output noise of the instrument from dc to 10 kHz is about 20 μV rms.

The deglitching circuit shown in Fig. 3 follows the summing amplifiers associated with the x, y, z, and e DACs. It is driven at about 300 kHz through a divider chain derived from the microprocessor crystal. Digital updates to the DACs are synchronized with the deglitcher clock. The 300-kHz ripple remaining at each output is removed with a six-pole low-pass filter having a cutoff frequency of about 100 kHz.

V. SOFTWARE DESIGN

The programs for the two processors were written in assembly language, with special attention given to achieving the highest execution speed possible. Most of the code was written as a looped in-line chain of instructions, interspersed with conditional branches to process special events such as e-scan sequences or to handle new commands from the laboratory computer. Short branch instructions were used with the I/O processor whenever possible, at the expense of causing the code to appear disjoint and out of order. Subroutine calls were minimized throughout, especially with the I/O processor, to avoid their very substantial overhead. For the same reason, a design based on tests for status was used instead of the more time-consuming interrupt-service-routine technique.

VI. MEASURED PERFORMANCE

The most important features of this instrument are the ease with which it can be configured to generate the very complex measurement sequences required for STM research and the very high speed with which it can return data to the lab computer. Maintaining a high data rate is especially important during e scans, because the z servo is generally disabled at that time, and the instrument must not be allowed to drift freely for very long. The instrument can scan at the rate of 50 000 points per second and can, in principle, maintain a data rate of 65 000 16-bit words, or 130 000 bytes, per second while performing an e scan. Most lab computers can handle

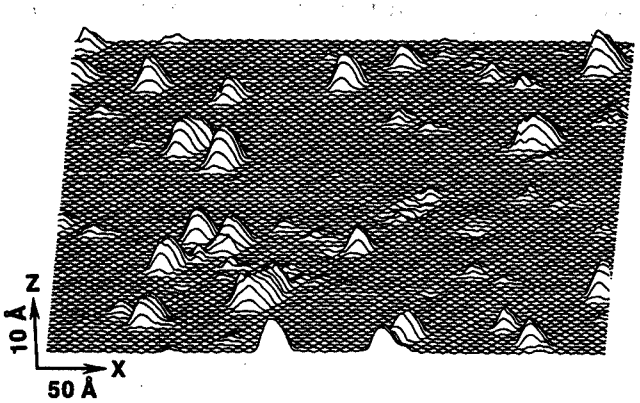

FIG. 4. Image of Fe clusters evaporated onto a GaAs(110) surface, obtained with the instrument described here. The perspective view with hidden line removal was created after the data were collected and stored.

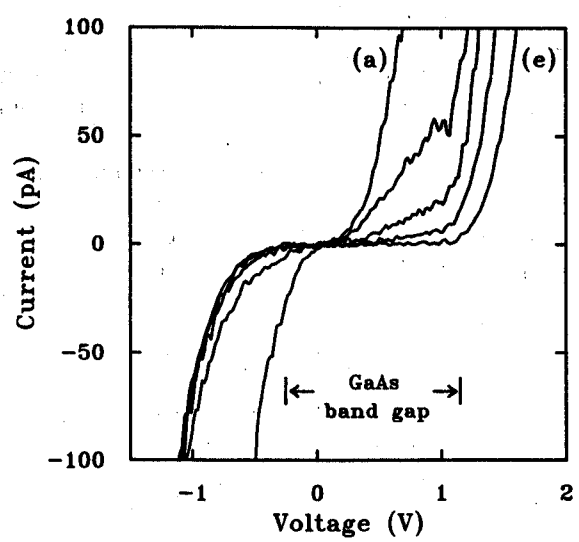

FIG. 5. Tunneling current vs distance from a Fe cluster on GaAs(110). Curve (a) is on the cluster. Curves (b)–(e) correspond to distance from the cluster edge of (b) 3.7 Å, (c) 6.7 Å, (d) 9.6 Å, and (e) 14.3 Å. Each curve consists of 250 points, each of which was measured with a 0.1-ms integrating time.

488-bus communications at this speed, which assumes ADC integration times of only 1 μs. They would have no speed problem when realistic integration times are specified. In practice, the measurement speed is limited by mechanical resonances in the mechanical system or by the lab computer, since it must store the mass of data returned, and is usually required to display a real-time image of the scanned surface as well.

A representative topographic image produced with the help of this instrument is shown in Fig. 4, taken from an article by Dragoset *et al.*[5] Sample curves of tunneling current versus voltage are shown in Fig. 5, taken from an article by First *et al.*[6]

ACKNOWLEDGMENTS

The author would like to thank R. J. Celotta, R. A. Dragoset, and J. A. Stroscio for their many helpful suggestions during the construction of this instrument and the preparation of this manuscript. The BASIC language interface to the laboratory computer was written by R. A. Dragoset. Partial support for this work was provided by the Office of Naval Research.

[1]G. Binnig and H. Rohrer, Sci. Am. **253**, (2), 50 (1985).
[2]M. Aguilar, P. J. Pascual, and A. Santisteban, IBM J. Res. Develop. **30**, 525 (1986).
[3]G. Binnig and D. P. E. Smith, Rev. Sci. Instrum. **57**, 1688 (1986).
[4]Certain commercial equipment, instruments, or materials are identified in this article in order to adequately specify the experimental procedure. Such identification does not imply recommendation or endorsement by NIST, nor does it imply that the materials or equipment identified are necessarily the best available for the purpose.
[5]R. A. Dragoset, P. N. First, J. A. Stroscio, D. T. Pierce, and R. J. Celotta, Mater. Res. Soc. Symp. Proc. **151**, 193 (1989).
[6]P. N. First, Joseph A. Strosio, R. A. Dragoset, D. T. Pierce, and R. J. Celotta, Phys. Rev. Lett. **63**, 1416 (1989).